TECHNICAL
SPECIFICATIONS
FOR
CONSTRUCTION
OF
SANITARY SEWERS
AND
APPURTENANCES

EAST COVENTRY TOWNSHIP
855 Ellis Woods Road
Pottstown, PA 19465

Revised: September 21, 2006

ARRO #5222.01

ARRO Consulting, Inc.
649 North Lewis Road, Suite 100
Limerick, PA 19468
Phone: 610-495-0303
Fax: 610-495-5855

TECHNICAL SPECIFICATIONS FOR CONSTRUCTION OF SANITARY SEWERS AND APPURTENANCES EAST COVENTRY TOWNSHIP

TABLE OF CONTENTS

SECTION 1 GENERAL CONDITIONS 1-1
1.1 Scope 1-1
1.2 Definitions 1-1
1.3 Fittings and Coordination of Work 1-4
1.4 Superintendence by Extender 1-4
1.5 Permits, Licenses and Taxes 1-5
1.6 Protection of Work and Property 1-5
1.7 Temporary Provision for Public Travel 1-6
1.8 Shop Drawings 1-6
1.9 Use of Premises 1-7
1.10 Materials and Workmanship 1-7
1.11 Samples, Certificates and Tests 1-7
1.12 Changes in Equipment and/or Materials 1-8
1.13 Warranty of Title 1-8
1.14 The Township's Right to Do Work 1-8
1.15 Engineer's Status 1-8
1.16 Safety and Health Regulations (OSHA) 1-9
1.17 Progress Schedule 1-9
1.18 Location of Utilities 1-9
1.19 Observation of Work 1-10
1.20 Use of Explosives 1-10
1.21 Lines, Grades and Construction Surveying 1-11
1.22 As-Built Plans 1-11
1.23 Required Easement Width 1-11
1.24 Testing 1-12
1.25 Standard Details 1-12
1.26 Soil Erosion and Sedimentation Pollution Control 1-12
1.27 Dedication of Sanitary Sewerage Facilities to Township 1-12

SECTION 2 TRENCH PREPARATION AND EXCAVATION 2-1
2.1 General Requirements 2-1
2.2 Stream Crossings 2-3
2.3 Boring, Jacking, and Tunneling 2-4

SECTION 3 PIPE BEDDING, TRENCH BACKFILL, AND GENERAL PIPE INSTALLATION REQUIREMENTS 3-1
3.1 Bedding 3-1
3.2 Backfilling 3-1
3.3 General Pipe Installation Requirements 3-3
3.4 Guarantees 3-6

SECTION 4 SEPARATION OF SEWERS AND OTHER UTILITIES 4-1
4.1 Horizontal Separation 4-1

4.2 Vertical Separation 4-1
4.3 Exceptions to Separation Requirements 4-2
4.4 Depth of Cover 4-2

SECTION 5 GRAVITY SEWERS 5-1
5.1 Materials 5-1
5.2 Installation 5-5
5.3 Testing 5-6

SECTION 6 GRAVITY LATERALS AND BUILDING SEWERS 6-1
6.1 Materials 6-1
6.2 Installation 6-2
6.3 Special Conditions and Requirements 6-4

SECTION 7 FORCE MAINS 7-1
7.1 Materials 7-1
7.2 Installation 7-5
7.3 Tests 7-7

SECTION 8 LOW PRESSURE SEWER SYSTEMS 8-1
8.1 Materials 8-1
8.2 Installation 8-5
8.3 Tests 8-7

SECTION 9 RESTORATION AND CLEAN-UP OF SURFACE 9-1
9.1 Replacement of Property 9-1
9.2 Pavement Restoration: 9-1
9.3 Seeding Restoration 9-1

SECTION 10 CLEAN-UP AND MAINTENANCE DURING CONSTRUCTION WORK 10-1
10.1 Clean-Up 10-1
10.2 Repair or Correction of Unsatisfactory Conditions 10-1
10.3 Temporary Pavement 10-1

SECTION 11 PERMANENT PUMPING STATIONS 11-1
11.1 General 11-1
11.2 Extender's Warranty 11-1
11.3 Submittals 11-1
11.4 Sitework 11-2
11.5 Structural Excavation and Backfill 11-3
11.6 Structural Concrete 11-4
11.7 Structural Steel 11-6
11.8 Control Building Design and Components 11-7
11.9 Metal Fabrications 11-11
11.10 Equipment 11-11
11.11 Mechanical 11-14

11.12 Plumbing 11-15
11.13 Heating and Ventilating 11-16
11.14 Emergency Generator 11-17
11.15 Electrical 11-19
11.16 Telephone Systems 11-23
11.17 Instrumentation and Controls 11-24
11.18 Valve/Meter Vault 11-27
11.19 Wet Well 11-28
11.20 Chemical Feed and Storage System 11-29
11.21 Sewage Grinder 11-30
11.22 Testing 11-30

SECTION 12 *RESERVED FOR FUTURE USE* 12-1

SECTION 13 GRINDER PUMPING SYSTEMS 13-1
13.1 General 13-1
13.2 Equipment 13-1
13.3 Installation 13-2

SECTION 14 OIL AND GREASE INTERCEPTORS 14-1
14.1 General 14-1

SECTION 15 SAMPLING AND FLOW MEASUREMENT 15-1
15.1 General 15-1

APPENDICES

APPENDIX 1 SEWER TESTING FORMS
APPENDIX 2 STANDARD DETAILS

TECHNICAL SPECIFICATIONS FOR CONSTRUCTION OF SANITARY SEWERS AND APPURTENANCES EAST COVENTRY TOWNSHIP

SECTION 1 GENERAL CONDITIONS

1.1 Scope

A. These Technical Specifications for Construction of Sanitary Sewers and Appurtenances (hereinafter referred to as "Technical Specifications") cover the requirements for extensions of and connections to the Township Public Sewer. All extensions and connections shall be completed in accordance with these Technical Specifications and the Commonwealth of Pennsylvania "Domestic Wastewater Facilities Manual," latest revision. The work shall include furnishing of all plans, labor, new materials, equipment, supplies, transportation, fuel, and power and performing all work as required by these Technical Specifications, including such detail drawings as may be required to prosecute the work. The work shall be executed in a workmanlike manner by qualified, careful, and experienced professionals and laborers.

B. The Township reserves the right to establish special supplemental requirements for any given extension or connection based upon unique features of the specific project, recent changes in standard operating and construction practices which may not be reflected within these Technical Specifications, or for any other legal or administrative reasons which the Township may identify.

C. For construction associated with a land development project, the Developer is the party who is ultimately accountable to the Township for all work and responsible for all work regardless if the work is performed by the Developer's Consultant or Contractor. This condition is implied throughout these Technical Specifications.

D. The Developer, Consultant and Contractor shall obtain a copy of these Technical Specifications from the Township and comply with these documents.

1.2 Definitions

A. The following definitions shall be applicable in these Technical Specifications:

1. *Building Code Official*: The appointed Building Code Official that represents the Township.

2. *Building Drain*: That part of a sanitary sewer drainage system inside a structure on an Improved Property, extending thirty (30) inches in developed length of pipe beyond the exterior wall of the structure and connecting to the Building Sewer.

3. *Building Sewer*: That part of a sanitary sewer drainage system extending from the Building Drain to the Lateral or the tank of an outdoor grinder pumping system. The term may also be referred to as "Service Line."

4. *Commonwealth*: The Commonwealth of Pennsylvania. This term may also be referred to as "State."

5. *Construction Drawings*: Those drawings prepared by the Extender or Township consultant and approved by the Township to show the detailed design of the specific project including plan layout and design details.

6. *Consultant*: Any individual, partnership, or corporation providing consulting services to the Extender.

7. *Contractor*: Any individual, partnership, or corporation performing sewer construction work for the Extender in the case of private construction, or for the Township in the case of contracts awarded by the Township.

8. *Developer*: Any equitable owner, landowner, agent of such landowner, or tenant with the permission of such landowner, who makes or who causes to make a subdivision of land and/or a land development, or who constructs, or causes to be constructed a sanitary sewer extension or sanitary sewerage facilities.

9. *Engineer*: The appointed Engineer that represents the Township. The term may also include a construction observer employed by the Engineer.

10. *Extender*: Shall mean the Developer and/or the Contractor.

11. *Improved Property*: Any property within the Township upon which there is erected a structure intended for continuous or periodic habitation, occupancy or use by human beings or animals and from which structure Sanitary Sewage and/or Industrial Wastes shall or may be discharged.

12. *Industrial Establishment*: Any Improved Property located in the Township and used or intended for use, wholly or in part, for the manufacturing, processing, cleaning, laundering or assembling of any product, commodity or article, or any other Improved Property located in the Township, from which wastes, in addition to or other than Sanitary Sewage, shall or may be discharged.

13. *Industrial Wastes*: Any and all wastes discharged from and Industrial Establishment, other than Sanitary Sewage.

14. *Land Development*: Activity as defined in the Township's Subdivision and Land Development Ordinance, as amended.

15. *Lateral*: That part of the public sanitary sewer drainage system extending from a sewer main, located in the street right-of-way or off-street easement, to the Building Sewer serving an Improved Property and connected or to be connected with the Building Sewer and providing gravity service. If there are no present improvements on a property, the "Lateral" shall mean that part of the public sanitary sewer drainage system extending from said sewer main to the street right-of-way line or off-street easement line for future connection to the Building Sewer, if and when the property is improved.

16. *Low-Pressure Lateral*: That part of the public sanitary sewer drainage system extending from a gravity sewer main or low-pressure force main, located in the street right-of-way or off-street easement, to the Low-Pressure Service Line serving an Improved Property and connected or to be connected with the Low-Pressure Service Line and providing pressure service. If there are no present improvements on a property, the "Low-Pressure Lateral" shall mean that part of the public sanitary sewer drainage system extending from said gravity sewer main or low-pressure force main to the street right-of-way line or off-street easement line for future connection to the Low-Pressure Service Line, if and when the property is improved.

17. *Low-Pressure Service Line*: That part of a sanitary sewer drainage system extending from the discharge side of an outdoor grinder pumping system tank to the Low-Pressure Lateral.

18. *Natural or Created Outlet*: Any outlet, whether naturally occurring or created, to a watercourse, ditch, pond, lake or other body of surface or ground water.

19. *Owner*: Any person vested with ownership, legal or equitable, sole or partial, of any Improved Property.

20. *Or Equal*: Equality of equipment or products versus those specified, as determined by and at the sole discretion of the Engineer. The term may also be referred to as "or approved equal."

21. *PADEP*: The Department of Environmental Protection of the Commonwealth of Pennsylvania.

22. *PADOT*: The Department of Transportation of the Commonwealth of Pennsylvania.

23. *Public Sewer*: Any off-site system, including all parts, facilities and other appurtenances thereof (including Laterals and Low-Pressure Laterals), owned and/or operated by the Township, for the collection, conveyance, treatment and/or disposal of Sanitary Sewage and/or Industrial Wastes through means approved by PADEP.

24. *Professional Engineer*: An individual licensed and registered under the laws of the Commonwealth of Pennsylvania to engage in the practice of engineering.

25. *Professional Land Surveyor*: An individual licensed and registered under the laws of the Commonwealth of Pennsylvania to engage in the practice of land surveying.

26. *Sanitary Sewage*: "Sewage" as defined in and by the Pennsylvania Sewage Facilities Act, Act of January 24, 1966 P.L. (1965) 1535, *as amended*, 35 P.S. §750.1 *et seq.*, and the rules and regulations of PADEP thereunder.

27. *Standard Details*: Those details that have been prepared by the Engineer and approved by the Township, and are included in Appendix 2 of these Technical Specifications to show general and typical construction requirements.

28. *Subdivision*: The division or redivision of a lot, tract, or parcel of land by any means into two or more lots, tracts, parcels, or other divisions of land.

29. *Township*: Township of East Coventry, Chester County, Pennsylvania.

30. *Work*: Labor, services, materials, and equipment as required for the successful completion of the project.

1.3 Fittings and Coordination of Work

The Extender shall be responsible for the proper fitting of all work and for the coordination of the operations of all trades, subcontractors, or material men engaged upon this project. The Extender shall be prepared to guarantee to each of his subcontractors the locations and measurements, which they may be required for the fitting of their work to all surrounding work.

1.4 Superintendence by Extender

At all times during which work is being performed under or affecting this project, the Extender shall keep a competent superintendent acceptable to the Township constantly on the site from the commencement of work until the completion thereof, who shall be constantly in touch with work and in all interlocking contracts affected thereby. The superintendent shall, in the absence of the Extender, see that the instructions of the Engineer are carried out and all directions given such superintendent shall be as binding as if given to the Extender.

The Extender shall have available at all times, including non-working hours, weekends, and holidays, an emergency maintenance crew and a person of authority and responsibility to act in cases of emergency, such as flooding, cave-ins, or other unsafe conditions, resulting from construction activities. The Extender shall submit to the Township all the names, addresses and telephone numbers of the emergency crew supervisor(s) prior to beginning construction operations. The Extender shall be

responsible for costs resulting from such emergency work.

The Extender is responsible for all costs incurred for any emergency work performed by the Township or others on the Extender's behalf.

1.5 Permits, Licenses and Taxes

The Extender shall give all notice required by and comply with all applicable laws, ordinances, and codes of the Local government. All construction work and/or utility installations shall comply with all applicable ordinances, and codes including all written waivers. Before installing any work, the Extender shall examine the Technical Specifications for compliance with applicable ordinances and codes and shall immediately report any discrepancy to the Township. Where the requirements of the Technical Specifications fail to comply with such applicable ordinances or codes, the Township may adjust the Technical Specifications to conform to such ordinances or codes (unless waivers in writing covering the difference have been granted by the governing body or department). Should the Extender fail to observe the foregoing provisions and proceed with the construction and/or install any sewage facility varying with any applicable Ordinance or code, including any written waivers (not withstanding the fact that such installation is in compliance with the Technical Specifications) the Extender shall remove such work without cost to the Township.

The Extender shall at his own expense, secure and pay to the appropriate regulatory agencies the fees, or charges for all permits required by the regulatory agencies.

Permits for the opening and/or occupation of Township or State roads shall be obtained by the Extender. All inspection fees and/or any charges shall be borne by the Extender, whether same is billed directly to him or to the Township.

Whenever the proposed construction requires a sales, consumers use, or other similar tax, the Extender shall pay for the same.

No Township permit will be waived for the Extender.

1.6 Protection of Work and Property

The Extender shall provide adequate protection against injury or loss arising in connection with the project for all his work and the property of the Township. The Extender shall make good any such damage, injury or loss. The Extender shall adequately protect adjacent property as provided by law. The Extender shall provide facilities for protection required by public authority or local conditions as passageways, guard fences, lights, etc.

The Extender shall preserve and protect all trees, shrubs and grass on or adjacent to the site which do not reasonably interfere with the construction as may be determined by the Township or Engineer, and the Extender shall be responsible for all unauthorized cutting

or damaging to trees and shrubs, including damage due to careless operation of equipment, stockpiling of materials or tracking of grass areas by equipment. The Extender shall remove only those trees designated by the Engineer to be removed.

1.7 Temporary Provision for Public Travel

The Extender shall perform his work in such a manner as to interfere as little as possible with the use of intersecting roads or adjoining property. No excavation shall be left open or other obstruction allowed to remain longer than is absolutely necessary; and the Extender shall provide all safeguards and temporary passageways that may be necessary for the convenience and protection of all persons using said property either day or night.

It shall be the duty of the Extender, at all times, to maintain crossings, walks, sidewalks, and streets open to traffic and in a satisfactory condition, and to keep all fire hydrants, valves, fire alarm boxes, and letter boxes accessible for trenches, a timber bridge at least three feet in width and equipped with side railings shall be provided. When the excavated material will encroach upon sidewalks or private property, planking shall be placed in order to keep the sidewalk or private property clear of excavated material.

Maintenance and protection of traffic on Township Streets and State Highways shall be in strict accordance with PADOT 408 Specifications, Section 900; Pennsylvania Title 67, Chapter 211; and, Pennsylvania Title 67, Chapter 203. The Extender shall modify the sign locations daily in order to protect that section of Street to be disturbed during that same day.

No road shall be blocked for traffic for longer than one (1) hour in any direction unless approved in writing by the Township Supervisors or PADOT. There shall be no lane restrictions in Township Streets or State Highways between the hours of 6:00 am and 9:00 am, and between the hours of 3:00 pm and 6:00 pm.

1.8 Shop Drawings

The Extender shall check and verify all field measurements and shall submit with such promptness as to cause no delay in his own work four (4) copies, checked and approved by him, of all shop or setting drawings and schedules required for the work of the various trades. The Engineer shall check and approve, with reasonable promptness, such schedules and drawings only for compliance, with the information given in the Technical Specifications. The Extender shall make any corrections required by the Engineer, file with the Engineer two copies and furnish such other copies as may be needed. The Engineer's approval of such drawings or schedules shall not relieve the Extender from responsibility for deviations from the Technical Specifications, unless the Extender has in writing called the Engineer's attention to such deviations at the time of submission, and secured the Engineer's written approval, nor shall it relieve the Extender from responsibility for errors in shop drawings or schedules.

1.9 Use of Premises

The Extender shall confine his equipment, storage of materials, and construction operations to the Project Limits as prescribed by ordinances or permits, or as may be directed by the Township, and shall not unreasonably encumber the site or public rights of way with his materials and construction equipment.

The Extender shall comply with all reasonable instructions of the Township and the ordinances and codes of the local government regarding signs, advertising, traffic, fires, explosives, danger signals, and barricades. PADOT flagging shall be required for all work on existing roads within the Township without exception.

1.10 Materials and Workmanship

Unless otherwise specifically provided, all workmanship, equipment, materials and articles incorporated in the work shall be new and the best grade of the respective kinds of their purpose. Where equipment, materials, articles, or workmanship are referred to in the Technical Specifications as "or equal" or "or approved equal", the Engineer shall decide the question of equality.

Materials specified by reference to the number or symbols of a specific standard, such as an A.S.T.M. Specification, a Federal Specification or other similar standard, shall comply with the requirements in the latest revision thereof and any amendment or supplement thereto except as limited to type, class or grade, or modified in such reference. The standards referred to, except as modified in the Technical Specifications, shall have full force and effect as though printed herein.

1.11 Samples, Certificates and Tests

The Extender shall submit all material or equipment samples, certificates, affidavits, etc., as called for in the contract documents or required by the Engineer, promptly. No such materials or equipment shall be manufactured or delivered to the site, except at the Extender's own risk, until the required samples or certificates have been approved in writing by the Engineer. Each sample submitted by the Extender shall carry a label giving the name of the Extender, the project for which it is intended, and the name of the producer. The accompanying certificates or letter from the Extender shall state that the sample complies with the Technical Specifications, shall give the name and brand of the product, its place of origin, the name and address of the producer and all specifications or other detailed information which will assist the Engineer in passing upon the acceptability of the sample promptly. It shall also include a statement that all materials or equipment furnished for use in the project, will comply with the samples and/or certified statements.

After actual deliveries, the Engineer will have such check tests made as he deems necessary in each instance and may reject materials and equipment and accessories for cause, even though such materials and articles have been given general approval. If materials, equipment or accessories, which fail to meet check tests, have been

incorporated in the work, the Engineer will have the right to cause their removal and replacement by proper materials or to demand and secure such reparation by the Extender as is equitable.

1.12 Changes in Equipment and/or Materials

In these Technical Specifications and on accompanying drawings, there are specified and shown certain pieces of equipment and/or materials which are deemed most suitable for service anticipated. This is not done to eliminate other equipment and material equally as good and efficient. Should Extender desire to use some other make of equipment or material, he shall submit to the Engineer a written request for such change and in same shall state advantage to the Township. Determination as to whether or not such change will be permitted rests solely with the Engineer.

1.13 Warranty of Title

No material, supplies, or equipment for the work shall be purchased subject to any chattel mortgage or under a conditional sale or other agreement by which an interest therein or in any part thereof is retained by the seller or supplier. The Extender shall warrant good title to all materials, supplies, and equipment installed or incorporated in the work and upon completion of all work, shall deliver the same together with all improvements and appurtenances, constructed or placed thereon by him to the Township free from any claim, liens, or charges. Neither the Extender nor any person, firm or corporation furnishing any material or labor for any work shall have the right to a lien upon any improvement or appurtenance thereon.

1.14 The Township's Right to Do Work

If the Extender should neglect to prosecute the work properly, the Township may, without prejudice to any other remedy he may have, make good such deficiencies and may deduct the cost thereof from the Extender's escrow funds.

1.15 Engineer's Status

The Engineer shall be the Township's representative during the construction period. The Engineer will make periodic visits to the site to be generally familiarized with the progress and quality of the work and to determine in general if the work is proceeding in accordance with the Technical Specifications. The Engineer will not be required to make exhaustive or continuous onsite inspections to check the quality or quantity of the work and will not be responsible for the Extender's failure to carry out the construction work in accordance with the Technical Specifications and Construction Drawings. During such visits and on the basis of observations while at the site, the Engineer will keep the Township informed of the progress of the work of Extender, and may condemn work as failure to adhere to the Technical Specifications and/or Construction Drawings. The Engineer shall have authority to reject the work whenever such rejection may be necessary in his reasonable opinion to insure the proper completion of the project.

1.16 Safety and Health Regulations (OSHA)

The Developer and Contractor are responsible to and shall comply with the Department of Labor Safety and Health Regulations for construction promulgated under the Occupational Safety and Heath Act of 1970 (PL-91-596) and under Section 107 of the Contract Work Hours and Safety Standards Act (PL-91-54). All work must be in compliance with State and Federal occupational health and safety regulations. Neither the Engineer nor the Township is responsible for enforcement of OSHA regulations.

1.17 Progress Schedule

The Extender shall submit for approval immediately after execution of the Contract, a carefully prepared Progress Schedule, showing the proposed dates of starting and completing each of the various sections of work.

1.18 Location of Utilities

The Extender will be held responsible for locating, in advance of the facilities to be built under this contract, all underground structures, such as water and gas mains; water and gas services; storm sewers and telephone and electric conduits, etc., which may be encountered during the constructing operation. He shall either dig test holes to determine the position of the underground structures, or he shall arrange with the Owners of such underground structures to assign a representative to mark the locations.

The existence and location of underground utilities as indicated on any plans of the Township are presented merely to serve as a notification that such utilities do exist in the general proximity of the work. Any utilities not shown, or not located as shown, shall not be cause of the Extender to deny responsibility for their protection and/or repair during construction.

A. The Extender shall notify all utility companies in advance of construction to include requesting the utilities to be located in accordance with Pennsylvania One Call Act 287/187/38 (1-800-242-1776) and cooperate with agents of these companies during the progress of the work. During the course of his work, if the Extender damages any of the aforementioned utilities, he shall immediately follow the procedure of emergency action and repair as established at his own expense.

B. Whenever the Extender, during the progress of the excavation, uncovers service pipes or lines, which because of injury or age are in poor condition, he shall immediately notify the proper authority in order that steps may be taken for replacement or repair. Locations of repairs, and the procedures of repairs that have been made shall be documented by the Extender.

C. The Extender shall sustain in their places and protect from direct or indirect injury, all pipes, conduits, tracts, walls, Buildings, and other structures or property in the vicinity of his work, whether above or below the ground, or that may appear in the trench.

1.19 Observation of Work

The Township and/or Engineer may appoint such person(s) as they deem necessary to observe, at any time, materials and equipment furnished and work done. The Engineer shall be notified of the time and place of all work performed in sufficient time to allow arrangements for the assignment of construction observers. Neither the surveillance of the work, nor the presence or absence of a construction observer shall relieve the Extender of any of his obligations of making his work conform to the intent of the Technical Specifications and Construction Drawings. The Township's construction observers shall be authorized to observe all work done and materials furnished. Such inspection may extend to all or any part of the work and to the preparation or manufacture of the materials to be used. Construction observers will be stationed on the work to report to the Engineer as to the progress of the work and the manner in which it is being performed; to report whenever it appears that the materials furnished and work performed by the Extender fail to fulfill the requirements of the Technical Specifications, and to call to the attention of the Extender any such failure or other default, but no surveillance or any failure to observe, at any time or place, shall relieve the Extender from any obligation to perform all work strictly in accordance with the requirements of the Technical Specifications. In case of any dispute arising between the Extender and any construction observer as to materials furnished or the manner of performing the work, the construction observer shall have the authority to reject materials or suspend the work until the question at issue can be referred to and decided on by the Engineer. The construction observers shall not be authorized to revoke, alter, enlarge, relax or release any requirements of the Technical Specifications, nor to approve or accept any portion of work, or to issue instructions contrary to the Technical Specifications. Construction observers shall in no case act as foreman or perform other duties for the Extender, nor interfere with the management of the work by the latter. Any instructions that the construction observers may give the Extender shall in no way be construed as releasing the Extender from fulfilling the terms of the Technical Specifications.

1.20 Use of Explosives

The use of mechanical surface impact equipment or drilling and hydraulic rock splitting equipment to remove rock shall be employed by the Extender to the greatest extent possible. If no other means of rock removal are viable, the Extender may employ the use of the explosives method (blasting).

Extender shall take complete responsibility for rock removal by the explosives method including any and all damages or injuries resulting from blasting operations. Blasting shall not be permitted within a radius of 200 feet from any structure or building, or within a 300-foot radius from any gas pipeline, and in no case closer to any gas pipeline than is permitted by the gas utility company.

1.21 Lines, Grades and Construction Surveying

The Extender shall be responsible for the stakeout for the construction of the project. The Extender shall provide all surveying required to layout the construction work from horizontal and vertical reference points. The Extender shall provide all engineering personnel, materials, equipment and labor required to stakeout the baselines and/or centerlines and all offset lines and grades.

On jobs where the Extender intends to use a laser he shall either provide offset stakes at a minimum of 100' intervals and use them to spot check his grades, or provide a level, rod and level operator to spot check his grades.

1.22 As-Built Plans

Extender shall provide the Township with one (1) set of reproducible (Mylar) and three (3) sets of paper prints of the As-Built Plans after the As-Built Plans have been reviewed and approved by the Township. As-Built Plans shall also be delivered to the Township on compact disc as follows:

A. Regardless of the projection and datum utilized for the approved subdivision and/or land development plan, As-Built Plans shall be projected in the State Plane Pennsylvania South Coordinate System, NAD83, utilizing the National Geodetic Vertical Datum of 1988 for consistency with Chester County and Township GIS (Geographic Information System) data.

B. Digital spatial data shall be fully compatible with AutoCAD 2000 or earlier versions. Files must be provided in the AutoCAD data exchange (.dxf) format. ArcInfo data submission is acceptable in the .e00 format providing the data is determined to be acceptable. All submitted data is subject to review and approval prior to acceptance.

C. The data shall be provided in an uncompressed format on a standard compact disc compatible with the Windows 95, 98, 00, and NT operating systems.

1.23 Required Easement Width

The minimum easement width for sanitary sewers at a depth of eight feet (8') and over, as measured from finished grade to the bottom of pipe, shall be thirty feet (30'). The minimum easement width for sanitary sewers at a depth of less than eight feet (8'), as measured from finished grade to the bottom of pipe, shall be twenty feet (20'). The minimum easement width for a sewer line located within the same easement as one or more other sewer lines, or other utility or utilities, shall be thirty feet (30'); however, sufficient easement width shall be furnished to provide adequate separation distance between utilities as specified in Section 4 herein. Following construction, all easements shall be restored to such a condition that they are drivable and mowable with a brush hog.

1.24 Testing

Testing of sanitary sewerage facilities shall be completed as described elsewhere in the Technical Specifications. The testing forms located in Appendix 1 of the Technical Specifications are incorporated herein by reference.

1.25 Standard Details

The Standard Details located in Appendix 2 of the Technical Specifications are incorporated herein by reference.

1.26 Soil Erosion and Sedimentation Pollution Control

The Township is located in a specially protected high quality or exceptional value watershed. As such, extreme care should be exercised in all disturbance activities to prevent degradation to the Waters of the Commonwealth, and upon completion or temporary cessation of earth disturbance activities, the project site shall be immediately stabilized with the appropriate temporary or permanent stabilization. Slopes greater than 3:1 shall utilize erosion control blanket stabilization.

1.27 Dedication of Sanitary Sewerage Facilities to Township

The Township shall not accept dedication of sanitary sewer gravity mains, force mains, and/or low-pressure force mains from Extender until: 1) Written acceptance of the sewer mains has been obtained from the Engineer, with acceptable (acceptability as determined by the Engineer) television inspection of gravity mains being performed by and at the expense of the Extender no more than sixty (60) calendar days prior to written offer of dedication (if more than one year elapses between the air testing of gravity sewer mains or vacuum testing of manholes and the subsequent televising of the gravity sewer mains and associated manholes, the Engineer may require the gravity sewer mains to be re-air tested and manholes to be re-vacuum tested prior to televising); and 2) the road, right-of-way, and/or easement in which the main is located has previously been accepted for dedication by the Township, or is being offered for dedication concurrently with the sewer main.

The Township shall not accept dedication of sanitary sewer pumping stations from Extender until: 1) Written acceptance of the pumping station has been obtained from the Engineer; and 2) all sanitary sewer gravity mains, force mains, and/or low-pressure force mains that convey sewage flow to and from the pumping station have been accepted for dedication by the Township, unless the pumping station is being offered for dedication concurrently with said sewer main(s).

SECTION 2 TRENCH PREPARATION AND EXCAVATION

2.1 General Requirements

A. Perform sheeting and shoring as required by Federal, State, and local laws and regulations and as otherwise required to protect workers, the public, and adjacent structure, utilities, and other aboveground and belowground facilities.

B. Excavation of every description and of whatever substances encountered shall be performed in accordance with all applicable Federal, State, and Local requirements.

C. Stripping, Storing and Restoring Surface Items: The Extender shall remove all paving, sub-paving, curbing, gutters, brick, paving block, granite curbing, flagging or other similar materials, and grub and clear the surface over the area to be excavated. He shall properly store and preserve such materials that may be required for future use in restoring the surface. The Extender shall be responsible for any loss of damage to said materials because of careless removal or neglectful or wasteful storage, disposal, or use of the materials.

D. Restoration: The Extender shall restore all shrubbery, fences, poles, or other property and surface structures removed or disturbed as a part of the work, to a condition equal to or better than that before the work began, furnishing all labor and materials incidental thereto.

E. Width of Trench: Pipe trenches shall be sufficiently true in alignment to permit the pipe to be laid in the approximate center of the trench. The trench shall be wide enough to provide a free working space on each side of the pipe. However, in no case shall the trench, from 6 inches below the bottom of pipe to 12 inches above the crown of the pipe, be wider than the pipe nominal diameter plus 12 inches on each side of the pipe.

F. Length of Trench:

1. No trench shall be opened more than 100 feet in advance of the pipelines laid.

2. The Extender shall limit all trench openings to a distance commensurate with all rules of safety.

3. If the work is stopped either totally or partially, the Extender shall refill the trench and temporarily repave over the same and the trench shall not be opened until he is ready to proceed with the construction of the pipeline.

4. The length of open trench shall not exceed what the Extender can complete within that working day.

5. All trench openings shall be covered for travel or filled to grade (and properly compacted) at the end of each day.

G. Pumping and Draining: The Extender shall remove by pumping, draining, or otherwise, any water which may accumulate in the trenches and other excavations and shall build all dams and do all other work necessary to keep the trenches or other excavation as free from water as possible. Pumped water shall be discharged to a sediment removal facility approved by the Engineer and County Conservation District.

H. Accommodations of Drainage: The Extender shall keep gutters, sewers, drains, and ditches open at all times so that the flow of storm or other waters shall not be obstructed. If the material excavated from the trenches must temporarily extend over gutters, sewers, drains or ditches, it shall be the duty of the Extender to plank or bridge over the gutters so that the flow of water is not impeded.

I. Maintenance of Traffic:

1. Work shall be conducted so as to cause a minimum of inconvenience to pedestrian and vehicular traffic and to private and public properties along the line of work. It shall be the duty of the Extender, at all times, to maintain crossings, walks, sidewalks, and streets open to traffic and in a satisfactory condition, and to keep all fire hydrants, valves, fire alarm boxes, and letter boxes accessible for use. Whenever it is necessary to maintain pedestrian traffic over open trenches, a timber bridge at least three feet in width and equipped with side railings shall be provided. When the excavated material will encroach upon sidewalks or private property, planking shall be placed in order to keep the sidewalk or private property clear of excavated material.

2. Maintenance and protection of traffic on Township Streets and State Highways shall be in strict accordance with Penn DOT 408 Specifications, Section 900; Pennsylvania Title 67, Chapter 211; and, Pennsylvania Title 67, Chapter 203. The Extender shall modify the sign locations daily in order to protect that section of Street to be disturbed during that same day.

3. Vehicular traffic shall not be blocked for more than one (1) hour in any one direction.

J. Caution in Excavation: The Extender shall proceed with caution in the excavation and preparation of the trench so that the exact location of underground structures, both known and unknown, may be determined, and shall be held responsible for the repair of such structures when broken or otherwise damaged due to carelessness on his part.

K. Protection of Utilities, Property and Structures: The existence and location of underground utilities as indicated on any plans of the Township are presented merely to serve as a notification that such utilities do exist in the general proximity of the work. Any utilities not shown, or not located as shown, shall not be cause of the Extender to deny responsibility for their protection and/or repair during construction.

1. The Extender shall notify all utility companies in advance of construction to include requesting the utilities to be located in accordance with Pennsylvania One Call Act 287/187/38 (1-800-242-1776) and cooperate with agents of these companies during the progress of the work. Procedures for emergency action and repairs to utilities shall be established with the utility company prior to commencement of the work. During the course of his work, if the Extender damages any of the aforementioned utilities, he shall immediately follow the procedure of emergency action and repair as established at his own expense.

2. Whenever the Extender, during the progress of the excavation, uncovers service pipes or lines, which because of injury or age are in poor condition, he shall immediately notify the proper utility owner in order that steps may be taken for replacement or repair. Locations of repairs, and the procedures of repairs that have been made shall be by the Extender.

3. The Extender shall sustain in their places and protect from direct or indirect injury, all pipes, conduits, tracks, walls, Buildings, and other structures or property in the vicinity of his work, whether above or below the ground, or that may appear in the trench.

L. Excavation in Fill: Pipes shall not be permitted to be laid in fill. Pipes shall be laid in virgin earth only.

M. Sinkholes: When a sinkhole is discovered immediately, during, and after excavation the Township must be notified. Remediation of the sinkhole will proceed under the supervision of a geotechnical Professional Engineer, registered in the Commonwealth of Pennsylvania.

2.2 Stream Crossings

A. Construct stream crossing in accordance with an approved Stream Crossing Plan and an approved Sedimentation and Erosion Control Plan. Obtain all Federal, State, and Local permits.

B. Make all necessary provisions for coffer damming, dewatering, and removal of excess excavated material.

C. Maintain the flow in the stream at all times.

D. Construct stream crossings as shown in the Standard Details. Encase pipe to limits shown on the Standard Detail with Penn DOT 408 Class A concrete. The vertical distance between top of concrete and the lowest point in the streambed shall be no less than 36 inches.

E. Where rock is encountered in the stream crossings, do not use forms to construct the concrete encasement. Place concrete on firm rock below the pipe to provide a firm bond between the encasement and the rock. Where concrete encasement to the dimensions shown in the Standard Details is entirely in rock, the vertical distance between top of encasement and the lowest point in the stream bed may be 12 inches, but no less.

2.3 Boring, Jacking, and Tunneling

A. General: Installation of pipe lines shall be by open-cut methods unless boring, jacking, and/or tunneling is approved or required by the Engineer, Penn DOT, railroad company, or other entity having jurisdiction over a particular location where a pipe line is being installed. Prior to the start of such construction, complete plans and specifications shall be submitted to and approved by the appropriate entity.

B. Casing Pipe Materials:

1. *Steel Casing Pipe*: ASTM A53 or other suitable steel meeting the approval of the appropriate entity.

   a) 35,000-psi minimum yield strength.
   b) Full circumference welded joints.
   c) Asphalt coated.
   d) Minimum wall thickness: 0.375 inch.
   e) Steel casing pipe shall be at least 6 inches in diameter larger than the outside diameter of the carrier pipe bell, or as required by the owner of the right-of-way, the entity issuing the permit, or the Township.
   f) Smooth wall steel pipes with a nominal diameter of over 54 inches will not be permitted for use as casing pipe.

2. *Casing Spacer*:

   a) The Extender shall furnish and install casing spacers meeting the following specifications:

      1) Split ring band with minimum of two runners on each half of the band.
      2) Band material: 14-gage hot rolled and pickled carbon steel with epoxy coating.
      3) Band liner: 0.090-inch thick PVC.
      4) Riser material: 10-gage carbon steel with epoxy coating.
      5) Runner material: UHMW polyethylene.

6) Studs, nuts, and washers: Type 304 stainless steel.
7) Acceptable manufacturer: Advanced Products and Systems, Inc. (APS) Model SI, Material Specification C1.

3. *Casing End Seals*: Synthetic rubber with Type 304 stainless steel bands; APS Model AC or AW.

4. The type of casing spacer shown in the Standard Details will also be approved for use on gravity sewers.

SECTION 3 PIPE BEDDING, TRENCH BACKFILL, AND GENERAL PIPE INSTALLATION REQUIREMENTS

3.1 Bedding

A. The trench shall be excavated to a depth of six (6) inches below the outside diameter of the pipe barrel, or deeper if so specified or required due to stability of subsurface material. The resultant subgrade shall be undisturbed, as approved by the Engineer. The bedding shall then be prepared by placing thoroughly compacted 2B (AASHTO No. 57) coarse aggregate (¾", clean and rounded) in 4-inch (uncompacted thickness) lifts to the bottom of the pipe. Bedding material shall be deposited in the trench for the full width below and on each side of the pipe and shall be brought up along the each side of the pipe, to the pipe centerline, uniformly to avoid displacing the pipe. Bedding material shall be compacted by tamping or approved mechanical methods. Bedding shall provide uniform and continuous bearing and support for the pipe at every point between pipe section ends. Pea gravel and river run shall not be acceptable bedding materials.

B. Special Bedding:

1. *Concrete Encasement*: If concrete encasement is required, the trench shall be excavated to a depth of six (6) inches below the outside of the barrel of pipes 24-inches in diameter or less and nine (9) inches below the outside of the barrel of pipes larger than 24-inches in diameter. Two (2) #5 steel reinforcing rods shall be required on the top and bottom of the concrete encasement.

2. *Unstable Subgrade*: Where the bottom of the trench at subgrade is found to be unstable or to include ashes, cinders, any type of refuse, vegetable, or other organic material, or large pieces or fragments of inorganic material, the Extender shall excavate and remove such unsuitable material to an approved width and depth. The unstable subgrade excavation shall be backfilled with 2B aggregate compacted in maximum 4-inch thick layers and compacted.

3. *Sinkholes*: Where a sinkhole is found during construction, the Engineer shall be notified immediately. Remediation of the sinkhole shall be under the guidance of a geotechnical Professional Engineer, registered in the Commonwealth of Pennsylvania.

3.2 Backfilling

A. General: Backfilling shall not be done in freezing weather except by permission of the Engineer, and it shall not be done with frozen material. Do not backfill when the material already in the trench is frozen.

B. Initial Backfill Over Pipe: From the centerline of the pipe and fittings to a depth of one (1) foot above the top of the pipe, the trench shall be backfilled by hand or by approved mechanical methods with 2B clean aggregate. The Extender shall use special care in placing this portion of the backfill so as to avoid damaging or moving the pipe. The backfill shall be compacted in 4" (uncompacted thickness) lifts.

C. Final Backfill:

1. *Aggregate Backfill to Restoration Depth (Existing Roads)*: From one (1) foot above the top of the pipe to restoration depth, the trench shall be backfilled with Penn DOT 2A or 2RC aggregate material, subject to limitations specified, and compacted (in 4" loose lifts with mechanical tamper or 8" loose lifts if vibratory equipment is used) to 100% of the determined dry weight density. Any consolidation method utilizing water such as jetting or puddling shall not be permitted. Consolidation shall proceed from the center of the trench to the sides to prevent arching.

2. *Aggregate Backfill to Restoration Depth (New Roads)*: From one (1) foot above the top of the pipe to restoration depth, the trench shall be backfilled with PADOT 2A or 2RC aggregate material, subject to limitations specified, and compacted (in 4" loose lifts with mechanical tamper or 8" loose lifts if vibratory equipment is used) to 100% of the determined dry weight density. In lieu of aggregate backfill, suitable excavated material approved by the Engineer and containing no stones larger than four (4) inches in maximum dimension, may be utilized. A maximum of 20% of the suitable excavated material backfill volume may be stones if the stones are evenly distributed within the material. Suitable excavated material shall be free of organic material, refuse, and frozen materials subject to limitations specified and shall be compacted in 4" loose lifts with mechanical tamper or 8" loose lifts if vibratory equipment is used. Any consolidation method utilizing water such as jetting or puddling shall not be permitted. Consolidation shall proceed from the center of the trench to the sides to prevent arching.

3. *Backfill Material to Restoration Depth (Lawn/Agricultural Areas)*: From one (1) foot above the top of the pipe to restoration depth, the trench shall be backfilled by hand or by approved mechanical methods. Backfill in this section of the trench shall be excavated material approved by the Engineer and containing no stones larger than four (4) inches in maximum dimension. A maximum of 20% of the backfill volume may be stones if the stones are evenly distributed within the material. Excavated material shall be free of organic material, refuse, and frozen materials subject to limitations specified and shall be compacted in 4" loose lifts with mechanical tamper or 8" loose lifts if vibratory equipment is used. Any consolidation method utilizing water, such as jetting or puddling shall not be permitted. Consolidation shall proceed from the center of the trench to the sides to prevent arching.

4. *Compaction*:

a) *Within State Highway Right-of-Way*: All trench backfill operations within State Highway right-of-way will be subject to inspection by representatives of the PADOT, and the work must be performed in accordance with the requirements of that Department. The Extender shall have no claim to the Township even though such requirements may entail more labor or services than the methods herein described. Use mechanical tampers or trench rollers to compact final backfill materials in trench refill operations to produce a density of backfill at the bottom of each layer of not less than 100 percent of maximum lab density as determined by ASTM D698 or as determined by Penn DOT requirements. The Extender shall employ the services of a Professional Geotechnical Engineer, registered in the Commonwealth of Pennsylvania, to perform field determinations of density in accordance with ASTM D1556 or in accordance with Penn DOT requirements.

b) *Existing Township Roads and New Roads:* Use mechanical tampers or trench rollers to compact backfill materials in trench refill operations to produce a density of backfill at the bottom of each layer of not less than 95 percent of maximum lab density as determined by ASTM D698. The Extender shall employ the services of a Professional Geotechnical Engineer, registered in the Commonwealth of Pennsylvania, to perform field determinations of density in accordance with ASTM D1556.

c) *Lawns, Meadows, and Cultivated Fields:* Use mechanical tampers or trench rollers to compact backfill materials in trench refill operations to produce a density of backfill at the bottom of each layer of not less than 90 percent of maximum lab density as determined by ASTM D698.

3.3 General Pipe Installation Requirements

A. Variations: The Township reserves the right to vary the line and/or grade from that shown on the submitted drawings for the pipe lines and to vary the location of fittings and valves when such changes may be necessary or advantageous. No claims for cost compensation will be allowed for changes in location or grade except as such changes are made after trenching has been done.

B. Sewers on Steep Slopes: Sewers on 15 percent slope or greater shall be anchored securely with concrete anchors or equal, spaced as follows:

1. Not over 36 feet center to center on grades 15 percent and up to 35 percent.

2. Not over 25 feet center to center on grades 35 percent and up to 50 percent.

3. Not over 16 feet center to center on grades 50 percent and over.

C. Handling of Materials into Trench: Proper implements, tools and facilities satisfactory to the Township shall be provided and used by the Extender for the safe and convenient prosecution of the work. All pipe, fittings, joining materials, etc. shall be carefully lowered into the trench piece by piece by means of a derrick, ropes, or other suitable tools or equipment, in such a manner as to prevent damage to sewer line materials and/or workmen. Under no circumstances shall such materials be dropped or dumped into the trench.

D. Pipe Clearance in Rocks: Ledge rock, boulders and large stones shall be removed to provide a clearance of at least 6 inches below and on each side of all pipe, bells, and fittings for pipes 24 inches in diameter or less, and 9 inches for pipes larger than 24 inches in diameter. The specified minimum clearances are the minimum clear distances, which will be permitted between any part of the pipe and/or fitting being laid and any part, protection or point of such rock, boulder or stone.

E. Concrete Encasement:

1. *Preparation*: Prior to the formation of the cradle or encasement, temporary supports consisting of timber wedges and solid concrete bricks or cap blocks shall be used to support the pipe in place. Temporary supports shall have minimum dimensions and shall support the pipe at not more than two locations, one at the bottom of the barrel of the pipe adjacent to the shoulder of the socket and the other near the spigot end. Two (2) #5 steel reinforcing rods shall be required on the top and bottom of the concrete encasement.

2. *Placing*: After joining of the pipe has been completed, concrete shall be uniformly poured beneath and on both sides of the pipe. The concrete shall be wet enough during placement to permit its flow, without excessive prodding, to all required points around the pipe surface. The width of cradle shall be such as to fill completely the trench width. In case of extremely wide trenches, concrete encasement may be confined above the top of the pipe to a narrower width but in no case shall it be less than the width of trench required for the size of pipe being used.

3. Before depositing concrete, the space within the limits of the pour shall have been cleared of all debris and water. Water shall not be allowed to rise adjacent to, or flow over, concrete for at least 24 hours. Concrete shall be protected from the direct rays of the sun and kept moist, by a method acceptable to the Township, for a period of seven days or until backfilling is begun. In no case shall backfilling begin within 24 hours of the time of placing, and the Township shall have strict control of the rate of backfilling.

F. Hammer Test: Ductile iron pipe and iron fittings shall be inspected for defects and while suspended above grade, be rung with a light hammer to detect cracks.

G. Cleaning Pipe and Fittings: All lumps, blisters and excess coating shall be removed from the bell and spigot end of each pipe, and the outside of the spigot and the inside of the bell shall be wire brushed and wiped clean and dry and free from oil and grease before the pipe is laid.

H. Laying Pipe: Every precaution shall be taken to prevent foreign material from entering the pipe while the pipe is being placed in the trench. If the pipe-laying crew cannot put the pipe into the trench and in place without allowing earth into it, the Township may require that before lowering the pipe into the trench, a heavy, tightly woven canvas bag of suitable size shall be placed over each end and left there until the connection is to be made into the adjacent pipe. During laying operations, no debris, tools, clothing or other material shall be placed in the pipe. After placing a length of pipe in the trench, the spigot end shall be centered in the bell and the pipe forced home and brought to correct line and grade. The pipe shall be secured in place with approved aggregate material tamped under it except at the joints. Pipe and fittings that do not allow a sufficient and uniform space for joints shall be removed and replaced with pipe and fittings of proper dimensions to insure such uniform space.

1. Precautions shall be taken to prevent dirt from entering the joint space.

2. At times when pipe laying is not in progress, the open ends of pipe shall be closed by a watertight plug or other means approved by the Township. This provision shall apply during the noon hour as well as overnight. If water is in the trench, the seal shall remain in place until the trench is pumped completely dry.

I. Cutting Pipe: The cutting of pipe for inserting valves, fittings or closure pieces shall be done in a neat and workmanlike manner, without damage to the pipe, so as to leave a smooth end at right angles to the axis of the pipe.

J. Permissible Deflection of Joints: If deflection is required, make after joint is assembled. The amount of deflection shall not exceed the maximum limits as specified in the AWWA C600 and C900.

K. Unsuitable Conditions for Laying Pipe: No pipe shall be laid in water or when, in the opinion of the Engineer, trench conditions are unsuitable.

L. Pipe Joining:

1. *Mechanical Joints*: The spigot end of the pipe shall be centrally located in the bell so that the rubber gasket is evenly seated.

   a) All loose rust or foreign matter shall be removed from the inside surfaces of the bell and outside surface of the spigot prior to assembly. Bolts shall be tightened uniformly with a ratchet wrench so as to affect the joint seal. The normal ranges of bolt torque to be applied are:

Bolt Size (Inches)	Torque-Ft. Lbs.
⅝	45 - 60
¾	75 - 90
1	100 - 120

   b) If effective sealing is not attained at the maximum torque indicated above, the joint shall be disassembled and reassembled after thorough cleaning.

2. *Push-On Type Joints*: Make joints as recommended by the manufacturer so as to affect the joint seal.

3.4 Guarantees

A. Land Development Projects: For construction associated with a land development project, guarantees required of the Extender shall be established in the Development and/or Financial Security Agreements executed for that particular land development project.

B. Township-Awarded Contracts: The Contractor shall guarantee his work for one (1) year from the date of substantial completion of the sanitary sewer facilities. The date of substantial completion shall be established by the Engineer.

SECTION 4 SEPARATION OF SEWERS AND OTHER UTILITIES

4.1 Horizontal Separation

A. Potable Water Lines:

1. Do not install any sewer line closer than 10 feet horizontally to any potable water line.

2. Where site conditions prohibit the 10-foot separation, a sewer may be laid closer than 10' to a water main if:

   a. It is laid in a separate trench; of if

   b. It is laid in the same trench, with the water main located at one side of a bench of undisturbed earth; and if

   c. In either case the elevation of the top (crown) of the sewer is at least 18 inches below the bottom (invert) of the water main.

B. Other Utilities

1. Other underground utilities, including but not limited to storm sewers, gas mains, and electric, shall not be located within six (6) feet of the centerline of the sanitary sewer.

2. Where site conditions prohibit the 6-foot separation, alternative sanitary sewer routing must be approved by the Engineer.

4.2 Vertical Separation

A. Potable Water Lines:

1. Where a sewer line must cross under a potable water line, install the sewer line so that the top of the sewer line is at least 18 inches below the bottom of the potable water line. Maintain the 18-inch vertical separation for at least 10 feet on either side of the potable water line as measured perpendicularly from the potable water line. Provide structural support for the potable water line so that the pipe does not settle or deflect during or after completion of construction.

2. Where the sewer line cannot be located to meet the requirements specified in Section 4.2.A.1 above, proceed as follows:

   a. Relocate the potable water line to provide the 18-inch separation from top of sewer line to bottom of water line, for a minimum distance of 10 feet on either side of the sewer line as measured perpendicularly from the sewer line.

b. Center one full length (minimum 18 feet) of potable water pipe over the sewer line so that the water line joints will be as far from the sewer line as possible.

c. Construct the relocated water line of AWWA C151 Special Class 52 ductile iron pipe with push-on joints or mechanical joints.

d. Provide adequate structural support for the potable water line so that the pipe does not settle or deflect during or after completion of construction.

e. Construct the sewer line for a minimum distance of 10 feet on either side of the potable water line, as measured perpendicularly from the water line, of AWWA C151 Special Class 52 ductile iron pipe with mechanical joints.

f. Prior to backfilling of the pipes, pressure test both the potable water line and the sewer line to assure that any joint within 12 feet of the crossing point, as measured perpendicularly from one pipe to the other pipe, will not leak.

B. Other Utilities

1. Other underground utilities, including but not limited to storm sewers, gas mains and electric, shall not be located within 12 inches (measured from edge of sewer pipe to edge of utility line) of the sanitary sewer.

2. Where site conditions prohibit the 12-inch separation, alternative sanitary sewer routing must be approved by the Engineer; or, utility lines may be rerouted if feasible.

4.3 Exceptions to Separation Requirements

Where a sewer line must cross over a potable water line or the separation requirements as specified above in Sections 4.1 and 4.2 cannot be met, contact the Engineer to determine materials, details, and extent of concrete encasement for pipes.

4.4 Depth of Cover

Provide minimum cover of 4 feet from top of pipe to finished grade, unless otherwise approved by the Engineer.

SECTION 5 GRAVITY SEWERS

5.1 Materials

A. General: All materials shall be new, manufactured within one (1) year prior to date of installation.

B. Pipe Joints: For pipe joints, use rubber gaskets suitable for conveying domestic sewage.

C. Ductile Iron Pipe: Ductile iron cement lined pipe shall be in full accord with ANSI A21.50 and ANSI A21.51, Latest Edition, for the material class or pressure designated and AWWA C150, Latest Edition, for wall thickness.

1. Minimum diameter shall be 8 inches.

2. Minimum thickness shall be Special Class 52.

3. Factory coat outside of pipe and fittings with NSF approved epoxy. Coating shall not be less than 20 mil dry film thickness.

4. Iron fittings shall be ductile iron or gray iron and shall be in full accord with the standard specification set forth in ANSI 21.10. Fittings larger than 48-inches shall be in full accordance with AWWA C100 Class B.

5. Joints shall be of the push-on type or mechanical joint type in full accord with ANSI A21.10 for all pipes except at changes in alignment, valves, or other conditions requiring restraints.

6. Inside of pipe shall be factory coated with NSF approved epoxy material. Coating shall not be less than 20 mil dry film thickness.

D. Polyvinyl Chloride Sewer Pipe: PVC pipe and fittings up to and including 15" diameter shall be manufactured in accordance with ASTM D3034 "Specifications for Type PSM Poly (Vinyl Chloride) (PVC) Sewer Pipe and Fittings" having a minimum wall thickness equal to SDR-35 (Standard Diameter Ratio) as noted in Table 1 of the ASTM Specification. PVC pipe and fittings between 18" and 21" in diameter shall be manufactured in accordance with ASTM F679 "Specifications for Poly (Vinyl Chloride) (PVC) Large-Diameter Plastic Gravity Sewer Pipe and Fittings" having a minimum wall thickness equal to T-1 as noted in Table 1 of the ASTM Specification. PVC pipe and fittings between 24" and 36" in diameter shall be manufactured in accordance with ASTM F794 "Poly (Vinyl Chloride) (PVC), Profile Gravity Sewer Pipe and Fittings Based on Controlled Inside Diameter" and ASTM F949 "Polyvinyl Chloride (PVC) Corrugated Sewer Pipe with a Smooth Interior and Fittings", and shall be Ultra-Corr PVC Gravity Sewer Pipe as manufactured by Uponor ETI Company, or equal.

1. Minimum diameter shall be 8 inches.

2. Fittings shall conform to same ASTM standard as for pipe.

3. Joints shall be push-on with elastomeric gasket, ASTM D3212; and, ASTM F477 for gasket specifications.

E. PVC Waterstop for Use at Connection to Existing Manholes: Gasket-type waterstop composed of virgin polyvinyl chloride (PVC) such as manufactured by Fernco Joint Sealer Co., CMA Waterstop as distributed by The General Engineering Company, or equal.

F. Flexible Pipe Coupling: Clamped design with virgin PVC coupling and two (2) type 305 stainless steel bands, such as manufactured by Fernco Joint Sealer Company, or equal.

G. Manhole Materials:

1. *General*: All pre-cast manhole components shall meet the requirements of ASTM C478 unless otherwise specified below.

   a) *Acceptable Manufacturers*:
      1) Terre Hill Concrete Products.
      2) Monarch.
      3) Or Equal.

2. *Precast manhole bases*: Precast manhole bases shall have flexible watertight joints at the point of entry of any sewer pipe into the manhole. The rubber compression gasket materials shall conform to ASTM C361 or ASTM C443. The gaskets shall be cast into the manhole base to become an integral part of the concrete. The gaskets shall be A-Lok Rubberman, Dura-Seal III as manufactured by Dura Tech Inc., Dual Seal II as supplied by Terre Hill Concrete Products, or equal.

3. *Precast concrete manhole components*: Concrete shall have a compressive strength of not less than 4,000 psi at 28 days (tests shall be in accordance with ASTM C39) with Type II cement. Manholes shall be reinforced both vertically and horizontally.

4. *Cast-in-place manhole components*: Concrete shall have a compressive strength of not less than 4,000 psi at 28 days (tests shall be in accordance with ASTM C39). Aggregates shall be of quality, gradation and proportions as approved by the Township after submission of test results on the design mix. Each cubic yard of concrete shall contain no less than six (6) bags of Portland cement. Slump of concrete shall not exceed 4 inches. Ready-mixed concrete shall conform to

ASTM C94. Portland Cement shall conform to ASTM C150, Type II. Manholes shall be reinforced both vertically and horizontally.

5. *Manhole Steps*: No. 4 Grade 60 steel reinforcing rod encapsulated in copolymer polypropylene compound conforming to ASTM D4101; M.A. Industries, Inc., or equal. The distance between rungs shall be 12 inches. The rungs shall have end lugs to prevent side slippage, and shall have a minimum clear rung width of 12 inches. The step surface shall be non-slip. The steps shall be protected from dissimilar materials in accordance with ASTM C478, Latest Revision.

   a) Manhole steps shall be positioned in the manhole in such a manner so as to permit easy entrance and exit from the manhole and so as not to conflict with any pipes, valves, or benches.

   b) Manhole steps shall be grouted in place using a non-shrink, non-metallic grout.

   c) The use of polypropylene inserts to secure the manhole steps shall not be permitted, nor shall the use of epoxy to secure the steps.

H. Non-Shrink, Non-Metallic Grout: Ready-mix product such as Sonogrout by Sonneborn, Masterflow 713 Grout by Master Builders, Darex Non-Metallic Grout by W. R. Grace and Company, F-100 by Sauereisen Cement Company, Five Star by U. S. Grout Corporation, or equal.

I. Preformed Plastic Sealing Compound: Fed. Spec. SS-S-210A, AASHTO M-198B ASTM C-990, rubber base compound, and shipped protected in a removable two-piece wrapper. Size cross-section of rope form to provide squeeze-out of material around entire interior and exterior circumference when joint is complete.

   1. *Acceptable Manufacturers*: Henry Company BUTYL-NEK, or approved equal.

J. Coatings:

   1. Prepare surfaces to be coated in accordance with the written instructions of the coating manufacturer, including cleaning, sandblasting, or acid etching as necessary.

   2. Coat precast components at the factory.

   3. *Interior and Exterior Surface Coatings*: Use NSF approved epoxy, 20-mil dry film thickness. Interior color shall be white. Exterior color shall be beige.

   4. An interior plastic liner (in lieu of interior surface coating) shall be provided on all force main discharge manholes, the next 5 manholes downstream of the force main discharge manhole, and in other manholes as directed by the Engineer.

Interior plastic liner shall provide a continuous, impermeable lining to shield precast concrete against deterioration caused by corrosive atmosphere. Interior plastic liner shall be AGRU Sure Grip Liner and GU-Base Liner as manufactured by Terre Hill Concrete Products. Channels, Bench and all penetrations through liner shall receive factor applied corrosion resistant coating.

K. Manhole Frame and Cover: Gray iron castings with built-in o-ring seal conforming to ASTM A48, minimum Class No. 30, designed for AASHTO Highway Loading HS-25. Provide castings of uniform quality, free from blowholes, porosity, hard spots, shrinkage distortion or other defects. Frame and cover design and dimensions shall be as shown in the Standard Details. Standard frame and cover shall be Cat. No. 1040 as manufactured by East Jordan Iron Works, Inc. Within 100-year floodplains and any other areas designated by the Engineer, watertight frame and covers shall be required. Watertight frames and covers shall be Cat. No. 1040 "Watertite" as manufactured by East Jordan Iron Works, Inc. Where directed by the Engineer in non-street areas, the top of rim elevation shall be set above finished grade.

1. *Finish*: Bearing surfaces shall be machined to prevent rocking and rattling under traffic.

2. *Frame Hold-down Bolts*: Refer to Standard Details.

L. Watertight Manhole Insert:

1. *General*: Manhole inserts shall be required in all manholes fit with a standard (as opposed to watertight) frame and cover. The manhole insert shall be manufactured from corrosion proof material suitable for atmospheres associated with wastewater collection systems.

2. *Material*: The insert shall be made from High Density Polyethylene Copolymer material that meets ASTM Specification Designation D 1248 Class A, Category 5, Type III. (The insert shall have a minimum impact brittleness temperature of 105°F or less.) The thickness shall be a uniform 1/8 inch or greater. The insert shall be manufactured to the dimensions as shown on the Drawings to allow easy installation within the manhole frame. The insert shall be fit with a nylon-lifting strap for removal.

3. *Venting*: The insert shall have a system of relieving pressure from the manhole or relieving a vacuum in the manhole. The venting system shall contain NO moving parts, which could be affected by grit accumulations, nor have any parts subject to corrosion. The venting system shall not allow water to completely fill the insert, which during freezing weather could freeze and lift the manhole cover.

4. *Manufacturer*: The insert shall be manufactured by Parson Environmental Products, Inc., or equal.

5. *Odor Control*: In areas where odor control is a concern, a special insert shall be utilized in lieu of a watertight insert when directed by the Engineer. The special insert shall be Odoreater Manhole Insert as manufactured by Parson Environmental Products, Inc. The associated carbon canister shall be replaced at maximum 6-month intervals or at intervals recommended by the manufacturer for the specific application, whichever is more stringent.

M. Precast Grade Rings: Leveling and adjusting units of 3-inches or 4-inches thickness of materials and constructions as specified previously. Grade rings of 2-inch thickness will not be permitted, unless specifically authorized by the Engineer. Factory cast grade rings with hold down boltholes matching location of same in manhole frame. Design must provide for full bearing of manhole frame. When precast concrete grade rings are used on PVC-lined manholes, a Water-Lok Connector, as manufactured by A-Lok Products, Inc., shall also be furnished and installed.

N. Underground Warning Tape:

1. Printed polyethylene tape, 3 inches minimum wide, magnetic for PVC pipe, green for sanitary sewers, 1-inch minimum lettering, printed with name of utility buried below, and suitable for installation in all soil types. Tape shall be placed above all sewers (refer to the Standard Details).

O. Deep Manholes: All manholes greater than or equal to 20' in depth, measured from the top of rim elevation to the invert out elevation, shall be provided with a landing (FRP grating) at the midpoint elevation. The Engineer, prior to installation, shall approve the landing and associated mounting hardware.

P. Stubs: Where directed by the Engineer, manhole shall be fit with a plugged pipe stub (diameter and invert elevation to be determined by the Engineer) to accommodate future connections.

5.2 Installation

A. General: Grade of pipe and distance between manholes must meet all requirements in the most recent edition of PADEP's "Domestic Wastewater Facilities Manual". The maximum slope of gravity sewer lines shall be 5%, unless otherwise approved by the Engineer. All pipe shall be laid to a uniform line and grade between manholes, bell ends upgrade, with a firm and even bearing along the barrel of the pipe, close joints, and smooth invert. The spigot end of the pipe shall be centered in, shoved tight and secured against the bell of the previously laid pipe. The interior of each pipe section

shall be cleaned of all excess joint and foreign material before the next pipe is laid. The pipe shall be laid in the aggregate materials as specified. Pipe laying shall commence at the lowest point and proceed upgrade. At the close of each day's work, and at such other times when pipe is not being laid, the open end of the pipe shall be protected with a close fitting stopper. Installation and joint assembly of plastic pipe shall in accordance with ASTM D 2321 for PVC pipe and AWWA C600 for ductile iron pipe.

B. Construction Control: The Extender shall provide at least three grade boards in advance of pipe laying at all times at intervals not exceeding fifty (50) feet and stretch a line parallel with the grade line. From this line, the trench and every pipe laid shall be tested as to grade and alignment. Base lines and controlling elevations established for the construction of the work shall be preserved and kept uncovered so that they can be examined at any time.

1. The use of laser equipment shall be permitted. Grade boards as specified will not be required if a laser is used.

2. Regardless of control used, the Extender shall provide alternative verification of grade as work progresses. Pipe not laid to proper line and grade will be removed and reconstructed at the Extender's expense.

C. Manholes: Manholes shall be placed at each change of grade, size and alignment of the pipe, and at all intersections. Terminal cleanouts will not be acceptable.

D. Construction Requirements:

1. Sanitary sewers shall not be placed in fill. Sanitary sewers shall be installed in virgin earth and trenches shall be restored as shown in the Standard Details.

2. Sanitary sewers shall not be installed within six (6) feet of electric and gas lines.

3. Extender shall install, cap, bury, and mark drainage pipe in trenches where springs are encountered.

5.3 Testing

A. Alignment: After the sewers have been laid and backfilled, a light shall be flashed between manholes or manhole locations to determine whether the alignment of the sewer is true and whether any pipe has been displaced, broken or otherwise damaged subsequent to laying. This test will be conducted before continuance of associated work and testing. Each section (manhole to manhole) of sewer shall show a good light circle throughout its length and any and all defects shall be corrected by the Extender, to the satisfaction of the Township, before the work shall proceed and before acceptance shall be made.

1. Mandrel testing will be required in addition to the lamp testing unless waived by the Township. Refer to Paragraph 5.3.E of this Section for the applicable requirements.

B. General Requirements for Leakage Testing:

1. Perform leakage tests after backfilling, no sooner than five days after backfilling.

2. At the Extender's option, preliminary leakage tests (for Extender's information only) may be performed before backfilling provided that:

   a) There is no conflict with other Specification Sections that require that no more than a specified length of trench is open at any time.

   b) All pipe (sewer mains and service laterals) is sufficiently restrained to prevent movement during the testing process.

   c) Tests for pipeline acceptance are also made after backfilling.

C. Air Test for Leakage:

1. *Air Testing*: The Extender shall test each section of sewer between manholes and all laterals to the limit of this contract using low-pressure air. Testing shall not be performed, until all backfilling has been completed. The Extender may, at his option, test the section of sewer for his own purposes, prior to completion of backfilling; however, the requirements of this subsection shall not be deemed to be completed until the lines have been tested after the backfilling has been completed and trench settlement has been minimized. The costs of any testing incurred prior to authorization from the Engineer after backfilling has been completed shall be borne by the Extender.

2. A minimum of two minutes shall be provided to allow equilibrium of the air temperature with pipe wall before test readings shall commence. The rate of air loss shall be determined by measuring the time interval required for the average internal pressure to decrease by 1.0 psig.

3. The initial test pressure to be developed in the sewer and laterals shall be determined as follows:

   a) For depths six (6) feet or less, the internal pressure shall not be less than 6.0 psig.

   b) For depths greater than six (6) feet, the internal pressure in psig shall be calculated as the sum of 3.5 plus the maximum height in feet divided by 2.3 between the invert of the sewer and the existing ground surface in the section of sewer to be tested. (For example, if the maximum height were determined

to be 9.2 feet, the added pressure would be 4.0 psig. The initial test pressure in the sewer would then be 7.5 psig. The allowable drop would be to 6.5 psig within the time indicated elsewhere in this subsection.)

c) In no case shall the test pressure in the sewers or laterals be greater than the maximum internal differential joint pressure recommended by the manufacturer of the pipe or 9.0 psig, whichever is less. The minimum test pressure shall be 6.0 psig.

4. The pipe shall be considered acceptable if the air loss rate does not exceed 0.0030 cubic feet per minute per square foot of internal pipe surface when tested at the initial pressure previously defined in this subsection. The time for the air pressure to decrease 1.0 psig shall not be <u>less</u> than the time indicated in the following table:

Pipe Diameter	Minutes	Seconds
6"	2	55
8"	3	57
10"	4	43
12"	5	5
15"	7	5
18"	8	30
21"	9	50
24"	11	20
27"	12	45
30"	14	10
36"	17	00
42"	19	50
48"	22	40

5. If the above rates of leakage are exceeded, the Extender shall, at his expense, determine source of leakage and make all necessary corrections and retest.

6. The Extender shall submit to the Engineer for approval the detailed test procedure and list of test equipment he proposes to use prior to testing.

D. <u>Infiltration</u>:

1. After the air testing described in the preceding Section 5.3.C has been completed by the Extender and prior to the use of the sewer by sewerage, regardless of any indications of the test results made by the Township, the Township reserves the right to perform field investigations, prior to final written acceptance of each sewer section by the Township and/or during the warranty period, to establish the leakage of groundwater into the sewer and laterals. The cost of these investigations shall be borne by the Extender.

2. Should the leakage exceed 50 gallons per day per inch diameter per mile of pipe for any section, the Extender shall, at the direction of the Township, and at no cost to the Township, perform any additional testing or corrective work required to reduce the infiltration in each manhole run from those lines installed by the Extender to less than 50 gallons per day per inch diameter per mile of pipe. This leakage applies to each manhole run separately and should not be construed to mean total leakage in the total system. The scope of this corrective work shall include, but not be limited to, cleaning, televising and testing the sewer and laterals to the limits installed by the Extender, to include testing and grouting of joints, excavation and replacement of faulty or damaged portions of the work, and all final restoration.

E. Deflection Testing of PVC Pipe:

1. Perform deflection test a minimum of 30 days after completion of backfilling on the pipe section to be tested.

2. Use a mandrel with a diameter equal to 95 percent of the actual inside diameter of the pipe. Do not use mechanical pulling devices to move the mandrel through the pipe.

3. Adjustable mandrels will not be acceptable for use in deflection testing.

4. Pipe section will be accepted if deflection does not exceed 5 percent of the actual inside pipe diameter at any point in the section under test.

F. Vacuum Testing of Manhole:

1. Vacuum testing of all manholes is required. Prior to testing manholes, thoroughly clean such and seal openings, both to complete satisfaction of the Township. Seal openings using properly sized plugs. Perform testing with frames and covers installed. The joint between the manhole and the manhole frame shall be included in the test.

   a) Perform vacuum testing in accordance with the testing equipment manufacturers written instructions.

   b) Draw a vacuum of 10 inches of mercury and close the valves.

   c) Consider manhole acceptable when vacuum does not drop below 9 inches of mercury for the following manhole sizes and times:

      1) 4-foot diameter - 60 seconds.
      2) 5-foot diameter - 75 seconds.
      3) 6 foot diameter - 90 seconds

2. If any manhole fails to pass the vacuum test, the Extender shall determine at his own expense the source or sources of leakage. The Extender shall repair or replace all defective materials and/or workmanship and shall conduct such additional retests as required to demonstrate that the manhole meets the requirements, at his own expense and at no cost to the Township. All materials and methods used to repair the manholes shall meet with the approval of the Township.

G. Television Inspection

1. Television inspection of all sewer piping is required. Television inspection shall be performed no sooner than thirty days after backfilling.

2. The Extender shall provide a complete closed circuit television system consisting of but not limited to the following items:

   a. Van-type viewing room, mounted therein being camera controls, heating and air conditioning facilities, communication facilities, and monitoring facilities that provide clean and visible pictures of the work being performed, and a video recording device.

   b. Television and video and grouting equipment capable of accurately measuring distances inside the sewer.

   c. An independent power source.

   d. A color, radial view camera with the ability to view into laterals and to view the complete pipe circumference. The camera shall include a lighting system to allow illumination of Lateral sewer connections.

   e. For the inspection of sewer mains and Laterals with bends and size restrictions, a mini, flexible camera shall be used. The camera shall be able to view the complete pipe circumference and shall include a lighting system that illuminates the entire pipe circumference and Lateral connections.

   f. Prior to video recording, the pipe shall be televised to determine that the line is sufficiently clean. The Extender is responsible for providing an unobstructed view of no less than 75% of the pipe interior.

   g. Video shall be recorded for all gravity sewer mains either on Digital Video Disc (DVD) or high quality VHS type Video Cassette Recorder (VCR) tapes.

h. During video recording, the Extender shall supply the following audio information:

1) Day, month, year and time.
2) Location of manholes using nearest street intersection and Township manhole numbering.
3) Descriptions for the condition of all manholes, laterals, leaking joints, breaks and other problem areas.

i. During video recording, the Extender shall provide the following screen display information, which shall be located on the screen so as to provide an unobstructed view:

1) Month, day, year
2) Job number
3) Manhole Number _____to Number _____
4) Linear footage
5) Weather conditions at time of videotaping.

H. Acceptance: Observation of successful testing of manholes or sewers by the Township does not constitute acceptance of the system or any portion thereof. Only upon final inspection by the Engineer and upon written acceptance for same will the system or portion thereof be considered acceptable. If, during this final inspection, any irregularities are observed, the condition must be corrected at the Extender's expense prior to acceptance.

SECTION 6 GRAVITY LATERALS AND BUILDING SEWERS

6.1 Materials

A. Pipe: Pipe materials shall be as follows (refer to Standard Details to correlate Lateral and Building Sewer components to materials):

1. Ductile Iron Pipe (DIP) shall be Class 52 (4" minimum) conforming to ANSI A 21.51 or AWWA C151 latest edition, and shall have push-on joints with elastomeric gaskets.
2. PVC SDR-35 shall meet ASTM D3034 specifications, and shall have push-on joints with elastomeric gaskets.
3. PVC C900 shall meet AWWA C900 specifications, and shall have push-on joints with elastomeric gaskets.

B. Pipe Plugs: Designed for permanent installation and removable. Obtain plugs for various types of pipe used from the respective pipe manufacturer.

C. Wye Connections: Wye connections are to be used for lateral connections on new sewer lines.

D. Service Saddles: Service saddles shall be used for Lateral connections to existing sewer mains.

1. Saddle assembly consists of:

   a) Saddle and bell.

   b) Adapter as required to provide for push-on installation of Lateral.

   c) Lateral sealing gasket that fits in groove in either bell or adapter.

   d) Tap gasket for sealing saddle/bell to collector pipe.

   e) Strap and fasteners for securing saddle/bell to collector pipe.

2. Pressure rating of assembled push-on connection: Minimum 7 psi.

3. *Materials and Components*:

   a. *Saddle/bell*: Cast iron; ASTM A48, minimum Class 35 coated inside and out with heavy coat of black asphalt type.

   b. *Service lateral push-on joint sealing gasket*: Elastomeric gasket, ASTM D3212; and, ASTM F477 for gasket specifications.

c. *Adapter*: PVC; ASTM D3034, SDR 35; epoxy bonded in cast iron bell.

d. *Tap gasket*: Synthetic rubber meeting requirements of ASTM C361 for oil-resistant gaskets.

e. *Strap*: Type 304 stainless steel; minimum thickness 24 gage; minimum width 2.5 inches.

f. *Strap bolts*: Type 304 stainless steel T-bolts, washers and hex nuts; minimum diameter 3/8 inch.

4. Use service saddles instead of in-line fittings only when approved by the Engineer at locations where use of in-line fittings is unfeasible or inappropriate. Service saddles may not be used for any Lateral over 6 inches in diameter.

5. Use "Y" pattern connections except:

   a. For vertical riser laterals, where "T" pattern service connections may be used.

   b. Where "T" pattern service connections are approved by the Township.

6. *Manufacturer*: Romak Saddle, Inserta Tee or equal.

6.2 Installation

A. Pipe and fittings (saddles, risers, bends, wyes, and plugs) shall be furnished and installed in strict accordance with these Technical Specifications and any and all practices and precautions required above for the gravity sanitary sewers in Section 5 of these Technical Specifications are equally applicable to the Laterals and Building Sewers.

B. If rock is encountered during the installation of a Lateral or Building Sewer, the Extender shall construct the Lateral or Building Sewer to provide a minimum "rock-free" distance of one foot beyond the end of the Lateral or Building Sewer. No Lateral or Building Sewer shall be "butted" against rock.

C. All Laterals and Building Sewers shall be installed with a minimum grade of ¼"/ft. A straight alignment shall be maintained where possible. A minimum cover of four feet (4') shall be maintained to prevent crushing and freezing of the pipe, unless the Engineer or Building Code Official approves a lesser minimum cover.

D. No trench shall be backfilled until the Lateral or Building Sewer has been visually inspected and approved by the Engineer or Building Code Official, respectively (refer to the Standard Details for pipe bedding and backfill).

E. Trap: A main or intercepting trap shall be installed as shown in the Standard Details.

F. Testing of Building Sewer: The Building Sewer shall not be deemed acceptable until said Building Sewer has satisfactorily passed the test hereinafter described. All costs of testing and any subsequent test(s), including equipment, material, water or labor required shall be the responsibility of the Owner.

1. The Building Sewer shall be tested by plugging the line at the Service Connection (point of connection with the Lateral) and by plugging the line at its point of connection with the Building. All risers, vents, plugs and cleanouts shall be adequately blocked, plugged or supported to withstand the pressure associated with the test. The test shall be made by either air or water. In either case, the test shall be designed to provide a residual pressure of 5.0 psi throughout the length of the Building Sewer.

2. The test shall be made by attaching a water pump or air compressor testing apparatus to any suitable opening and after closing and supporting all other inlets and outlets to the Building Sewer, forcing air or water into the Building Sewer until there is a uniform gauge pressure of 5.0 psi. The Building Sewer shall be deemed acceptable if this pressure is maintained for 15 minutes without the introduction of additional water or air.

3. Care shall be taken that the pressures generated by the test do not exceed the pipe manufacturer's recommendations.

G. Testing of Laterals: Laterals shall be tested in accordance with the procedures specified in Section 5 of these Technical Specifications for gravity sanitary sewers. However, in the case of a new Lateral tying into an existing gravity sewer main, the Lateral shall be tested concurrently with the Building Sewer in accordance with Subsection F above.

H. For a new connection into an existing sewer main, the following requirements shall be applicable for that portion of the Lateral installed within the paved portion of street rights-of-way and it shall be the responsibility of the Owner of the Improved Property served to require his plumber or Extender to adhere to these requirements.

1. The trench shall be thoroughly compacted using mechanical tamping equipment.

2. The trench area shall be graded to conform to existing grade.

3. No surplus excavated materials or debris shall be piled or stored in this area.

4. All street surfaces that are disturbed or damaged by the Owner or his plumber or contractor shall be properly repaired at the Owner's cost.

5. Subsequent settlement of the street resulting from improper construction practices shall be promptly repaired at the Owner's cost.

6. In no case, shall the sewer lateral be installed at a higher elevation than any potable water service within 18-inches.

7. In no case, shall a sewer lateral be installed within a 24-inch radius of any other utility, except for potable water lines, in which case a minimum separation of ten (10) feet is required.

8. If the Owner or his plumber or contractor fails to comply with any of the requirements of this Subsection H, then after reasonable notice to the Owner, the Township may proceed on its own to make any necessary corrections or repairs so that the aforesaid requirements are fulfilled. If the Township does so repair, then the Owner of the Improved Property shall be liable to the Township for the entire cost of such repairs and said cost will be included in the Owner's next quarterly billing for sewer services.

9. Only one (1) drop lateral connection may be employed in any single lateral.

6.3 Special Conditions and Requirements

A. Unless otherwise authorized by the Engineer or Building Code Official, cleanouts shall be provided in each Building Sewer at fifty (50) foot intervals.

B. Basement floor drains shall not be connected in any manner to the Public Sewer.

C. All cleanouts, traps, and test tees shall be located as shown in the Standard Details.

D. According to field conditions, vertical risers may be utilized when authorized or directed by the Engineer. Vertical riser Lateral connections shall be in accordance with the Standard Details.

E. Cleanouts and vents shall be located in lawn/agricultural areas (i.e. non-paved areas) to the greatest extent practicable. If a cleanout or cleanout and vent combination must be located in a paved area, such as a driveway, due to site constraints, the cleanout and/or vent risers shall be specially installed in accordance with the Standard Details.

SECTION 7 FORCE MAINS

7.1 Materials

A. Ductile Iron Pipe: Use ductile iron pipe conforming to ANSI A21.51 or AWWA C151, Latest Edition, for the material class or pressure designated and ANSI A21.50 AWWA C150, Latest Edition, for wall thickness. Minimum wall thickness shall be Class 52 except where flanged pipe is required. Use Special Class 53 pipe where flanged connections are required. AWWA rated C900 PVC may be substituted for pipe 4-inches or greater in diameter where approved by the Engineer.

1. *Corrosion-Resistant Linings*: Ductile iron pipe and fittings shall be lined (interior) with a corrosion-resistant ceramic-epoxy lining. The lining material shall be an amine-cured novalac epoxy containing at least 20% by volume of ceramic quartz pigment. Interior lining shall be U.S. Pipe PROTECTO 401, or approved equal.

2. *Fittings*: Ductile or gray iron in accordance with the requirements set forth in ANSI A21.10 or AWWA C110, Latest Edition. All fittings shall be minimum Class 250 with corrosion-resistant lining and joints as required for pipe restraint. Iron fittings to be enclosed in pits, vaults, or manholes shall be of the short-body flanged type in order to minimize the size of the pits, vaults, and manholes.

3. *Joints*: Push-on type or mechanical joint type in accordance with ANSI A21.11 or AWWA C111, for all pipe except at changes in alignment, valves, tees, caps, and plugs not restrained with thrust blocking.

   a) Joints requiring pipe restraint and not restrained with thrust blocking shall be Lok-Type or TR Flex as manufactured by U. S. Pipe; Super-Lock as manufactured by Clow; Lok-Fast as manufactured by American Pipe; Snap-Lok or locked mechanical joint as manufactured by Griffin; Locked mechanical joint as manufactured by Atlantic State; or approved equal.

   b) In addition to restrained joints, adequate tie rods shall be provided to develop full joint restraint and must extend to the adjacent fitting or joint as approved by the Engineer.

   c) Mechanical joint retainer glands shall not be used. Only ductile or SDR-8 Mega-lug style joint glands or approved equal shall be required.

   d) Prior to construction, joint restraint system details shall be submitted for Township's review and approval.

B. Air Valves: The Township reserves the right to require air valves, of any one of the following types, at any location in the force main.

1. *Sewage Air Release Valve*: Designed to automatically release air, gas or vapor under pressure during system operation. Valve design shall feature long body and float stem components so that the operating mechanism is kept free from contact with sewage during operation. Valve construction shall be as follows:

   a) *Maximum Working Pressure Rating*: 150 psi.

   b) *Valve Body and Cover*: Cast iron, ASTM A48, Class 35.

   c) *Discharge Orifice Seat, Mechanism and Valve Stem*: Stainless Steel.

   d) *Orifice Button*: Stainless steel and Buna-N, Nitrile Rubber ASTM SB800.

   e) *Mechanism Lever Pins and Float*: High strength stainless steel, ASTM A240.

   f) *Backflushing and Cleaning Accessories*: Factory assembled to the valve and consisting of a shut-off valve at bottom inlet, a blow-off valve near the bottom of the valve body, quick disconnect couplings and shut-off valve at top of valve, and a 5-foot section of rubber hose with quick disconnect coupling.

   g) *Acceptable Manufacturers*:
      1) APCO.
      2) Golden Anderson.
      3) Val-Matic Valve and Manufacturing Corp.
      4) Or Equal.

2. *Sewage Air and Vacuum Valve*: Designed to automatically exhaust large quantities of air during the filling of a system and to allow air to re-enter the system during draining or when a vacuum occurs. Valve design shall feature long body and float stem components so that the operating mechanism is kept free from contact with sewage during operation. Valve construction shall be as follows:

   a) *Minimum Working Pressure Rating*: 150 psi.

   b) *Valve Body and Cover*: Cast iron, ASTM A48, Class 35.

   c) *Float Stem and Guide*: Bronze, ASTM B584.

   d) *Floats*: Stainless Steel, ASTM A240.

   e) *Orifice Seat*: Buna-N, Nitrile Rubber, ASTM SB800.

   f) *Backflushing and Cleaning Accessories*: Factory assembled to the valve and consisting of an inlet shut-off valve, a 1-inch blow-off valve near the bottom of the valve body, quick disconnect couplings and a ½-shut-off valve at the

top of valve, and a 5-foot section of rubber hose with quick disconnect coupling.

g) *Acceptable Manufacturers*:
   1) APCO.
   2) Golden Anderson.
   3) Val-Matic Valve and Manufacturing Corp.
   4) Or Equal.

3. *Sewage Combination Air Release Valves*: Consisting of an air release valve and an air and vacuum valve factory piped into a compact assembly. The combination assembly shall automatically release air, gas or vapor under system operating pressure and shall also allow air to re-enter the system during draining or when a vacuum occurs. Combination valve designs shall feature long bodies and float stem components so that the operating mechanisms are kept free from contact with sewage during operation. Valve construction shall be as follows:

   a) *Maximum Working Pressure Rating*: 75 psi.

   b) *Valve Bodies and Covers*: Cast iron, ASTM A48, Class 35.

   c) *Air Release Valve Discharge Orifice Seat, Mechanism and Valve Stem*: Stainless Steel.

   d) *Air Release Valve Orifice Button*: Stainless Steel and Buna-N, Nitrile Rubber, ASTM SB800.

   e) *Air Release Valve Mechanism Lever Pins and Float*: High strength stainless steel, ASTM A240.

   f) *Air and Vacuum Valve Float Stem and Guide*: Bronze, ASTM B584.

   g) *Air and Vacuum Valve Floats*: Stainless Steel, ASTM A240.

   h) *Air and Vacuum Valve Orifice Seat*: Buna-N, Nitrile Rubber, ASTM SB800.

   i) *Backflushing and Cleaning Accessories*: Factory assembled to the combination valves and consisting of two inlet shut-off valves, two blow-off valves, two clear water inlet valves, and a 5-foot section of rubber hose and quick disconnect couplings.

   j) *Acceptable Manufacturers*:
      1) APCO.
      2) Golden Anderson.
      3) Val-Matic Valve and Manufacturing Corp.
      4) Or Equal.

C. Underground Warning Tape:

1. Printed polyethylene tape, 3 inches minimum width, magnetic for PVC pipe, green for force mains, one-inch minimum lettering, printed with name of utility buried below, and suitable for installation in all soil types. Tape must be placed above all force mains (reference Standard Details).

D. Cleanouts:

1. Cleanouts shall be constructed as shown in the Standard Details. Valves shall be installed in each cleanout manhole.

E. Valves and Appurtenances:

1. *Valves*: Valves shall be installed on force main at locations shown in the Standard Details and as required by the Engineer.

2. *Plug Valves*: Valves installed in valve/cleanout pits shall be actuated with a quarter turn type hand lever. Buried valves shall be actuated with an underground actuator through a cast iron valve box. Plug valves shall be non-lubricated eccentric plug valves as manufactured by DeZurik, Keystone, or Miliken.

   a) Valves shall open left (counter-clockwise).

   b) Buried valves shall have 2-inch square cast iron operating nuts. Each valve shall also be supplied with a roadway type valve box.

   c) Buried valves shall be supplied with mechanical joint end connections.

   d) Valves located in vaults, pits, or manholes shall have flanged ends.

3. Gate Valves (3"-12" in diameter):

   a) Non-Rising stem type when installed underground and rising stem type otherwise.

   b) Valve stem seal of such design that allows replacement of O-rings with valve under pressure in the fully open position.

   c) Iron body, bronze mounted with resilient-seated wedge conforming to AWWA C 509.

   d) Resilient seat of Styrene Butadiene SBR or Urethane Rubber bonded to cast iron wedge.

e) Stem seals of O-ring type.

f) Buried valves equipped with 2-inch square operating nut and open counter-clockwise. Handwheel operator in vaults.

g) Exterior to be asphalt varnish or epoxy coated; interior ferrous metal parts to be epoxy coated, AWWA C 550.

h) Acceptable Manufacturers: American Flow Control, or approved equal.

4. *Valve Boxes*: Standard 5-¼ inch cast iron extension roadway type valve boxes shall be installed over buried valves. Screw threads shall be cast integrally with box wall. Welded screw threads are not acceptable.

7.2 Installation

A. Pipe Installation:

1. *General*: All pipe shall be laid and maintained to the required lines and grades with fittings and valves at the required locations, spigots centered in bells, and all valves plumb. Pipe laying shall commence at the lowest point and proceed upgrade.

2. *Depth*: All force mains shall be buried at a minimum depth of 4 feet, measured from finished grade to the top of pipe.

3. *Construction Control*: During the installation of a force main, the pipe shall be laid at a constantly increasing grade to each high point, air valve, or point of discharge. The Extender shall provide sufficient construction control to assure that there are no sags in the force main which could tend to accumulate air other than at the high points. Failure to comply with this requirement shall necessitate that the Extender take remedial steps to correct this situation. All associated costs shall be borne by the Extender.

4. *Cleaning Pipe and Fittings*: All lumps, blisters and excess coal tar coating shall be removed from the bell and spigot end of each pipe, and the outside of the spigot and the inside of the bell shall be wire-brushed and wiped clean and dry and free from oil and grease before the pipe is laid.

5. *Laying Pipe*: Every precaution shall be taken to prevent foreign material from entering the pipe while the pipe is being placed in the trench. If the pipe-laying crew cannot put the pipe into the trench and in place without allowing earth into it, the Engineer may require that before lowering the pipe into the trench, a heavy, tightly woven canvas bag of suitable size shall be placed over each end and let there until the connection is to be made into the adjacent pipe. During laying operations, no debris, tools, clothing or other material shall be placed in the pipe.

After placing a length of pipe in the trench, the spigot end shall be centered in the bell or coupling and the pipe forced home and brought to correct line and grade. The pipe shall be secured in place with approved backfill material tamped under it except at the joints. Pipe and fittings, which do not allow a sufficient and uniform space for joints, shall be removed and replaced with pipe and fittings of proper dimensions to ensure such uniform space.

6. *Jointing Ductile Iron Pipe*:

   a) Mechanical Joints: The spigot end of the pipe shall be centrally located in the bell so that the rubber gasket is evenly seated. All loose rust or foreign matter shall be removed from the inside surfaces of the bell and outside surface of the spigot prior to assembly. Bolts shall be tightened uniformly with a ratchet wrench so as to affect the joint seal. The normal range of bolt torques to be applied are:

Bolt Size (Inches)	Torque-Ft. Lbs.
⅝	45 - 60
¾	75 - 90
1	100 - 120

   If effective sealing is not attained at the maximum torque indicated above, the joint shall be disassembled and reassembled after thorough cleaning.

   b) Push-On Type Joints: Make joints as recommended by the manufacturer so as to affect the joint seal.

7. *Joining PVC Pipe*: Make joints as recommended by the manufacturer so as to affect the joint seal.

B. Anchorage:

1. *Concrete Thrust Blocks*: Provide concrete thrust blocks for all fittings, and at all locations where horizontal and/or vertical deflections are made in the joints of the piping. Only by authorization of the Township.

2. *Reaction Backing*: Reaction backing shall be Penn DOT Class C concrete. Backing shall be placed between solid ground and the fitting to be anchored. The backing shall, unless otherwise indicated or directed, be so placed that the pipe and fitting joints will be accessible for repair.

3. *Metal Harness*: Metal harness of tie rods of adequate strength to prevent movement shall be used. Steel rods or clamps shall be type 304 stainless steel.

4. *Anchorage for Bends*: All bends deflecting 11.25 degrees or more on force mains 6 inches in diameter or greater shall be provided with a thrust restraint system to prevent movement.

   a) Either a restrained joint pipe or thrust block system (only by authorization of the Township) will be permitted.

   b) Only a thrust block system will be used for PVC pipe.

   c) Suitable metal rods shall be used only as directed by the Engineer.

   d) Mechanical joint retainer glands shall not be used to obtain a restrained joint.

C. Cleanout Installation: Cleanout manholes shall be installed every 2,000' and/or at low points, unless otherwise directed by the Engineer.

D. Setting Fittings and Valves:

1. *General*: Valves and fittings shall be set and jointed to pipe in the manner specified previously for cleaning, laying, and jointing pipe.

2. Provide a concrete manhole for every air release, air and vacuum, and combination air release and air and vacuum valve. Manholes shall meet the required specified above for gravity Sanitary Sewers. The manholes shall be constructed to permit valve repairs and afford protection to the valve and pipe from impact where they pass through the manhole walls. All valves and fittings shall be supported by saddles. The saddles shall be continuous under all valves and fittings within the valve manholes.

7.3 Tests

A. Hydrostatic Tests:

1. *Pressure Test*: After the pipe has been laid and backfilled as specified, all newly laid pipe or any valved section thereof, shall be subjected to a hydrostatic pressure of 150 psi or 50% in excess of the normal working pressure, whichever is greater. Where any section of a main is provided with concrete reaction backing, the hydrostatic pressure test shall not be made until at least thirty days have elapsed after the concrete reaction backing was installed.

   a) *Duration of Test*: Two hours.

   b) *Procedure*: Each section of pipe shall be slowly filled with water and the specified test pressure, based on the elevation of the lowest point of the line or section under test and corrected to the elevation of the test gauge, shall be applied by means of a pump connected to the pipe in a manner satisfactory to

the Engineer. The pump, pipe connections, and all necessary apparatus including gauges, shall be furnished by the Extender. The Extender will make all taps into the pipe, and furnish all necessary assistance for conducting the tests.

c) *Expelling Air Before Test*: Before applying the specified test pressure, all air shall be expelled from the pipe. If permanent air vents are not located at all high points, the Extender shall make the necessary taps at such points before the test is made. After the test has been completed, the Extender shall insert plugs at the tapping points.

d) *Examination Under Pressure*: Any cracks or defective pipes, fittings, or valves discovered in consequence of this pressure test, shall be removed and replaced by the Extender with sound material, and the test shall be repeated until satisfactory to the Engineer.

2. *Leakage Test*: A leakage test shall be conducted concurrently with the pressure test. The Extender will furnish laboratory calibrated test gauge and measuring device, and all necessary assistance to conduct the test.

a) *Leakage Definition*: Leakage is defined as the quantity of water that must be supplied into the newly laid pipe, or any valve section thereof, to maintain pressure within 5 psi of the specified leakage test pressure after the pipe has been filled with water and the air expelled.

b) *Permitted Leakage*: No pipe installed will be accepted until the leakage is less than the number of gallons per hour as determined by the formula:

$$L = \frac{SD\sqrt{P}}{133{,}200}$$

in which "L" equals the allowable leakage in gallons per hour; "S" is the length of pipeline tested in feet; "D" is the nominal diameter of the pipe, in inches, and "P" is the average test pressure during the leakage test, in pounds per square inch gauge. (The allowable leakage according to the formula is equivalent to 11.65 U. S. Gal. per 24 hours per mile of pipe per inch nominal diameter, for pipe in 18-foot lengths evaluated on a pressure basis of 150 psi). When testing against closed metal-seated valves, an additional leakage per closed valve of 0.0078 gallon per hour per inch of nominal valve size shall be allowed. There shall be no additional leakage allowed for service connections.

c) The Engineer will record both the makeup water and pressure at one-half hour intervals during the test period.

d) Should any test of pipe laid disclose leakage greater than that specified above, the Extender should, at his own expense, locate, repair, and replace the defective joints, pipe, or fittings until the leakage is within the specified allowance.

3. *Common Requirements*:

a) *Township Presence*: The Engineer shall monitor the pressure and leakage tests. The Extender shall notify the Engineer of the test day at least 48 hours (2 working days) in advance.

b) If testing fails to meet the test requirements, the Extender shall pay for all additional engineering personnel testing time.

c) *Weather*: No testing will be authorized unless air temperature is 35 degrees Fahrenheit or higher.

d) *Acceptance*: Observation of successful testing of force mains by the Engineer does not constitute acceptance of the system or any portion thereof. Upon completion of any determined portion of a total system, and successful testing thereof, the Engineer may recommend final acceptance to the Township. Only upon final inspection by the Engineer and upon written acceptance for same will the system or portion thereof be considered acceptable. If, during this final inspection, any irregularities are observed, the condition must be corrected at the Extender's expense prior to acceptance.

SECTION 8 LOW PRESSURE SEWER SYSTEMS

8.1 Materials

A. Ductile Iron Pipe: Ductile iron pipe conforming to ANSI A21.51 or AWWA C151, Latest Edition, for the material class or pressure designated and ANSI A21.50 AWWA C150, Latest Edition, for wall thickness. Minimum wall thickness shall be Class 50 for 6-inch diameter and Class 51 for 3-inch and 4-inch diameter pipe except as may be required for flanged pipe or restrained joints. Use Special Class 53 pipe where flanged connections are required. AWWA rated SDR 21 PVC may be substituted where approved by the Engineer.

1. *Corrosion-Resistant Linings*: Ductile iron pipe and fittings shall be lined (interior) with a corrosion-resistant ceramic-epoxy lining. The lining material shall be an amine-cured novalac epoxy containing at least 20% by volume of ceramic quartz pigment. Interior lining shall be U.S. Pipe PROTECTO 401, or approved equal.

2. *Fittings*: Ductile or gray iron in accordance with the requirements set forth in ANSI A21.10 or AWWA C110, Latest Edition. All fittings shall be minimum Class 250 with cement lining and joints as required for pipe restraint. Iron fittings to be enclosed in pits, vaults, or manholes shall be of the short-body flanged type in order to minimize the size of the pits, vaults, and manholes.

3. *Joints*: Push-on type or mechanical joint type in accordance with ANSI A21.11 or AWWA C111, for all pipe except at changes in alignment, valves, tees, caps, and plugs not restrained with thrust blocking.

   a) Joints requiring pipe restraint and not restrained with thrust blocking shall be Lok-Type or TR Flex as manufactured by U. S. Pipe; Super-Lock as manufactured by Clow; Lok-Fast as manufactured by American Pipe; Snap-Lok or locked mechanical joint as manufactured by Griffin; Locked mechanical joint as manufactured by Atlantic State; or approved equal.

   b) In addition to restrained joints, adequate tie rods shall be provided to develop full joint restraint and must extend to the adjacent fitting or joint as approved by the Township.

   c) Mechanical joint retainer glands shall not be used. Only ductile or SDR-8 Mega-lug style joint glands or approved equal shall be required.

   d) Prior to construction, joint restraint system details shall be submitted for Township's review and approval.

B. Polyvinyl Chloride Pipe and Fittings (PVC):

1. *Less than or equal to 4-inchDiameter*: PVC pipe conforming to ASTM D2241, SDR-21, except 1.5-inch pipe or smaller shall be SDR-26.

   a) Fittings: Compatible PVC fittings as recommended by pipe manufacturers, and of same class as the pipe.

2. *Joints*: Push-on type conforming to ASTM D3139.

   a) Solvent weld joints permitted only for special situations as approved by Engineer (e.g. bored service line highway crossings).

   b) PVC pipe joints shall be restrained at changes in alignment, valves, tees, caps, and plugs with thrust blocking.

   c) Split retainer flanges shall not be used in place of thrust blocks.

   d) Proposed joint restraint system shall be submitted for Engineer's review and approval.

C. Air Valves: The Township reserves the right to require air valves, of any one of the following types, at any location in the force main.

1. *Sewage Air Release Valve*: Designed to automatically release air, gas or vapor under pressure during system operation. Valve design shall feature long body and float stem components so that the operating mechanism is kept free from contact with sewage during operation. Valve construction shall be as follows:

   a) *Maximum Working Pressure Rating*: 150 psi.

   b) *Valve Body and Cover*: Cast iron, ASTM A48, Class 35.

   c) *Discharge Orifice Seat, Mechanism and Valve Stem*: Stainless Steel.

   d) *Orifice Button*: Stainless steel and Buna-N, Nitrile Rubber ASTM SB800.

   e) *Mechanism Lever Pins and Float*: High strength stainless steel, ASTM A240.

   f) *Backflushing and Cleaning Accessories*: Factory assembled to the valve and consisting of a shut-off valve at bottom inlet, a blow-off valve near the bottom of the valve body, quick disconnect couplings and shut-off valve at top of valve, and a 5-foot section of rubber hose with quick disconnect coupling.

   g) *Acceptable Manufacturers*:
      1) Val-Matic Valve and Manufacturing Corp.; Model No. 48 BWA.

2) Or Equal.

2. *Sewage Air and Vacuum Valve*: Designed to automatically exhaust large quantities of air during the filling of a system and to allow air to re-enter the system during draining or when a vacuum occurs. Valve design shall feature long body and float stem components so that the operating mechanism is kept free from contact with sewage during operation. Valve construction shall be as follows:

   a) *Minimum Working Pressure Rating*: 150 psi.

   b) *Valve Body and Cover*: Cast iron, ASTM A48, Class 35.

   c) *Float Stem and Guide*: Bronze, ASTM B584.

   d) *Floats*: Stainless Steel, ASTM A240.

   e) *Orifice Seat*: Buna-N, Nitrile Rubber, ASTM SB800.

   f) *Backflushing and Cleaning Accessories*: Factory assembled to the valve and consisting of an inlet shut-off valve, a 1-inch blow-off valve near the bottom of the valve body, quick disconnect couplings and a ½-shut-off valve at the top of valve, and a 5-foot section of rubber hose with quick disconnect coupling.

   g) *Acceptable Manufacturers*:
      1) Val-Matic Valve and Manufacturing Corp.; Model No. 300 Series.
      2) Or Equal.

3. *Sewage Combination Air Release Valves*: Consisting of an air release valve and an air and vacuum valve factory piped into a compact assembly. The combination assembly shall automatically release air, gas or vapor under system operating pressure and shall also allow air to re-enter the system during draining or when a vacuum occurs. Combination valve designs shall feature long bodies and float stem components so that the operating mechanisms are kept free from contact with sewage during operation. Valve construction shall be as follows:

   a) *Maximum Working Pressure Rating*: 75 psi.

   b) *Valve Bodies and Covers*: Cast iron, ASTM A48, Class 35.

   c) *Air Release Valve Discharge Orifice Seat, Mechanism and Valve Stem*: Stainless Steel.

   d) *Air Release Valve Orifice Button*: Stainless Steel and Buna-N, Nitrile Rubber, ASTM SB800.

e) *Air Release Valve Mechanism Lever Pins and Float*: High strength stainless steel, ASTM A240.

f) *Air and Vacuum Valve Float Stem and Guide*: Bronze, ASTM B584.

g) *Air and Vacuum Valve Floats*: Stainless Steel, ASTM A240.

h) *Air and Vacuum Valve Orifice Seat*: Buna-N, Nitrile Rubber, ASTM SB800.

i) *Backflushing and Cleaning Accessories*: Factory assembled to the combination valves and consisting of two inlet shut-off valves, two blow-off valves, two clear water inlet valves, and a 5-foot section of rubber hose and quick disconnect couplings.

j) *Acceptable Manufacturers*:
   1) Val-Matic Valve and Manufacturing Corp.; Model No. 48 or 49/300 Series.
   2) Or Equal.

D. Underground Warning Tape:

1. Printed polyethylene tape, 3 inches minimum width, magnetic for PVC pipe, green for force mains, one-inch minimum lettering, printed with name of utility buried below, and suitable for installation in all soil types. Tape must be placed above all force mains (reference Standard Details).

E. Cleanouts:

1. Cleanouts shall be constructed as shown in the Standard Details. Valves shall be installed in each cleanout manhole.

F. Valves and Appurtenances:

1. *Valves*: Valves shall be installed on force main at locations shown in the Standard Details and as required by the Township.

2. *Ball or Plug Valves*: Valves installed in valve/cleanout pits shall be actuated with a quarter turn type hand lever. Buried valves shall be actuated with an underground actuator through a cast iron valve box. Ball valves on individual properties shall be oriented with the seat in place for pressure. Valves 3-inch and larger shall be flanged end Dresser, Series 800, X-Centric, or equal. Valves 2-inch and 2½ inch shall be flanged end DeZurik, Eccentric, or equal. One and one-half inch valves shall be screwed end DeZurik, Eccentric, or equal.

a) Valves shall open left (counter-clockwise).

b) Buried valves shall have 2-inch square cast iron operating nuts. Each valve shall also be supplied with a roadway type valve box.

c) Buried valves shall be supplied with mechanical joint end connections.

d) Valves located in vaults, pits, or manholes shall have flanged ends.

3. *Valve Boxes*: Standard 5-1/4-inch cast iron extension roadway type valve boxes shall be installed over buried valves and service line cleanouts in accordance with AWWA C500. Screw threads shall be cast integrally with box wall. Welded screw threads are not acceptable.

8.2 Installation

A. Pipe Installation:

1. *General*: All pipe shall be laid and maintained to the required lines and grades with fittings and valves at the required locations, spigots centered in bells, and all valves plumb. Pipe laying shall commence at the lowest point and proceed upgrade.

2. *Depth*: All low-pressure force mains shall be buried at a minimum depth of 4 feet, measured from finished grade to the top of pipe.

3. *Construction Control*: During the installation of a force main, the pipe shall be laid at a constantly increasing grade to each high point, air valve, or point of discharge. The Extender shall provide sufficient construction control to assure that there are no sags in the force main which could tend to accumulate air other than at the high points. Failure to comply with this requirement shall necessitate that the Extender take remedial steps to correct this situation. All associated costs shall be borne by the Extender.

4. *Cleaning Pipe and Fittings*: All lumps, blisters and excess coal tar coating shall be removed from the bell and spigot end of each pipe, and the outside of the spigot and the inside of the bell shall be wire-brushed and wiped clean and dry and free from oil and grease before the pipe is laid.

5. *Laying Pipe*: Every precaution shall be taken to prevent foreign material from entering the pipe while the pipe is being placed in the trench. If the pipe-laying crew cannot put the pipe into the trench and in place without allowing earth into it, the Engineer may require that before lowering the pipe into the trench, a heavy, tightly woven canvas bag of suitable size shall be placed over each end and let there until the connection is to be made into the adjacent pipe. During laying operations, no debris, tools, clothing or other material shall be placed in the pipe. After placing a length of pipe in the trench, the spigot end shall be centered in the bell or coupling and the pipe forced home and brought to correct line and grade. The pipe shall be secured in place with approved backfill material tamped under it except at the joints. Pipe and fittings, which do not allow a sufficient and uniform space for joints, shall be removed and replaced with pipe and fittings of proper dimensions to ensure such uniform space.

6. *Jointing Ductile Iron Pipe*:

   a) Mechanical Joints: The spigot end of the pipe shall be centrally located in the bell so that the rubber gasket is evenly seated. All loose rust or foreign matter shall be removed from the inside surfaces of the bell and outside surface of the spigot prior to assembly. Bolts shall be tightened uniformly with a ratchet wrench so as to affect the joint seal. The normal range of bolt torques to be applied are:

Bolt Size (Inches)	Torque-Ft. Lbs.
5/8	45 - 60
3/4	75 - 90
1	100 - 120

   If effective sealing is not attained at the maximum torque indicated above, the joint shall be disassembled and reassembled after thorough cleaning.

   b) Push-On Type Joints: Make joints as recommended by the manufacturer so as to affect the joint seal.

7. *Joining PVC Pipe*: Make joints as recommended by the manufacturer so as to affect the joint seal.

B. Setting Fittings And Valves

1. *General*: Valves and fittings shall be set and jointed to pipe in the manner specified previously for cleaning, laying and jointing pipe.

2. Provide a precast concrete manhole for every air release and vacuum valve meeting the requirements for manholes as previously specified. The manholes shall be constructed to permit valve repairs and afford protection to the valve and

pipe from impact where they pass through the manhole walls. All valves and fittings shall be supported by saddles as indicated on the Drawings. The saddles shall be continuous under all valves and fittings within the valve manholes.

C. Anchorage:

1. *Concrete Thrust Blocks*: Provide concrete thrust blocks for all fittings, and at all locations where horizontal and/or vertical deflections are made in the joints of the piping. Only by authorization of the Township.

2. *Reaction Backing*: Reaction backing shall be Penn DOT Class C concrete. Backing shall be placed between solid ground and the fitting to be anchored. The backing shall, unless otherwise indicated or directed, be so placed that the pipe and fitting joints will be accessible for repair.

3. *Metal Harness*: Metal harness of tie rods of adequate strength to prevent movement shall be used. Steel rods or clamps shall be type 304 stainless steel.

4. *Anchorage for Bends*: All bends deflecting 11.25 degrees or more on force mains 6 inches in diameter or greater shall be provided with a thrust restraint system to prevent movement.

   a) Either a restrained joint pipe or thrust block system (only by authorization of the Township) will be permitted.

   b) Only a thrust block system will be used for PVC pipe.

   c) Suitable metal rods shall be used only as directed by the Engineer.

   d) Mechanical joint retainer glands shall not be used to obtain a restrained joint.

D. Cleanout Installation: Cleanout manholes shall be provided at each dead end and at 500-foot intervals (maximum), unless otherwise approved by the Engineer, on long stretches of low-pressure force main. Terminal cleanout manholes shall be used on all dead ends and at other locations as required by the Township.

8.3 Tests

A. Hydrostatic Tests:

1. *Pressure Test*: After the pipe has been laid and backfilled as specified, all newly laid pipe or any valved section thereof, shall be subjected to a hydrostatic pressure of 150 psi or 50% in excess of the normal working pressure, whichever is greater. Where any section of a main is provided with concrete reaction backing, the hydrostatic pressure test shall not be made until at least five days have elapsed

after the concrete reaction backing was installed. If high early strength cement is used in the concrete reaction backing, the hydrostatic pressure test shall not be made until at least two days have elapsed.

a) *Duration of Test*: Two hours.

b) *Procedure*: Each section of pipe shall be slowly filled with water and the specified test pressure, based on the elevation of the lowest point of the line or section under test and corrected to the elevation of the test gauge, shall be applied by means of a pump connected to the pipe in a manner satisfactory to the Township. The pump, pipe connections, and all necessary apparatus including gauges, shall be furnished by the Extender. The Extender will make all taps into the pipe, and furnish all necessary assistance for conducting the tests.

c) *Expelling Air Before Test*: Before applying the specified test pressure, all air shall be expelled from the pipe. If permanent air vents are not located at all high points, the Extender shall make the necessary taps at such points before the test is made. After the test has been completed, the Extender shall insert plugs at the tapping points.

d) *Examination Under Pressure*: Any cracks or defective pipes, fittings, or valves discovered in consequence of this pressure test, shall be removed and replaced by the Extender with sound material, and the test shall be repeated until satisfactory to the Township.

2. *Leakage Test*: A leakage test shall be conducted concurrently with the pressure test. The Extender will furnish laboratory calibrated test gauge and measuring device, and all necessary assistance to conduct the test.

a) *Leakage Definition*: Leakage is defined as the quantity of water that must be supplied into the newly laid pipe, or any valve section thereof, to maintain pressure within 5 psi of the specified leakage test pressure after the pipe has been filled with water and the air expelled.

b) *Permitted Leakage*: No pipe installed will be accepted until the leakage is less than the number of gallons per hour as determined by the formula:

$$L = \frac{SD\sqrt{P}}{133{,}200}$$

in which "L" equals the allowable leakage in gallons per hour; "S" is the length of pipeline tested in feet; "D" is the nominal diameter of the pipe, in inches, and "P" is the average test pressure during the leakage test, in pounds per square inch gauge. (The allowable leakage according to the formula is equivalent to 11.65 U. S. Gal. per 24 hours per mile of pipe per inch nominal diameter, for pipe in 18-foot lengths evaluated on a pressure basis of 150 psi). When testing against closed metal-seated valves, an additional leakage per closed valve of 0.0078 gallon per hour per inch of nominal valve size shall be allowed. There shall be no additional leakage allowed for service connections.

c) The Township will record both the makeup water and pressure at one-half hour intervals during the test period.

d) Should any test of pipe laid disclose leakage greater than that specified above, the Extender should, at his own expense, locate, repair, and replace the defective joints, pipe, or fittings until the leakage is within the specified allowance.

3. *Common Requirements*:

a) *Township Presence*: The Township or Engineer shall monitor the pressure and leakage tests. The Extender shall notify the Township of the test day at least 48 hours (2 working days) in advance.

b) If testing fails to meet the test requirements, the Extender shall pay for all additional engineering personnel testing time.

c) *Weather*: No testing will be authorized unless air temperature is 35 degrees Fahrenheit or higher.

d) *Acceptance*: Observation of successful testing of low-pressure force mains by the Township does not constitute acceptance of the system or any portion thereof. Upon completion of any determined portion of a total system, and successful testing thereof, the Engineer may recommend final acceptance to the Township. Only upon final inspection by the Engineer and upon written acceptance for same will the system or portion thereof be considered acceptable. If, during this final inspection, any irregularities are observed, the condition must be corrected at the Extender's expense prior to acceptance.

SECTION 9 RESTORATION AND CLEAN-UP OF SURFACE

9.1 Replacement of Property

The Extender shall restore (unless otherwise stipulated) all sidewalks, curbing, gutters, shrubbery, fences, poles, sod, markings, traffic lines, or other property and surface structures removed or disturbed as a part of the work to a condition equal to that before the work began, furnishing all labor and materials incidental thereto.

9.2 Pavement Restoration:

Restoration of State Highways shall be in accordance with Pennsylvania rules and regulations, Penn DOT requirements, and the provisions of the highway occupancy permit. Restoration of Township Streets and other paved surfaces shall be in accordance with the requirements of the Township.

9.3 Seeding Restoration

A. Lawn Restoration Materials:

1. *Permanent Seed Mixture*: Penn DOT 408, Section 804, Formula B.

   a) *Kentucky Bluegrass Mixture*; a combination of improved certified varieties with no one variety exceeding 25 percent of the total Blue Grass component: 50 percent by weight.

   b) *Creeping Red Fescue or Chewings Fescue*: 30 percent by weight.

   c) *Perennial Ryegrass Mixture*; a combination of improved certified varieties with no one variety exceeding 50 percent of the total Ryegrass component: 20 percent by weight.

2. *Temporary Seed Mixture*: Penn DOT 408, Section 804, Formula E. Annual Ryegrass: 100 percent.

3. Provide seed that complies with the Pennsylvania Seed Act of 1965, Act No. 187, and regulations of the Pennsylvania Department of Agriculture, Bureau of Plant Industry.

4. *Lime*: Pulverized agricultural limestone; Penn DOT 408, Section 804.

5. *Mulching Material*: Oat or wheat straw, dry, free from weeds and foreign matters detrimental to plant life. Hay or chopped cornstalks are not acceptable.

6. *Mulching Material*: Wood cellulose fiber, free of growth or germination inhibiting ingredients.

7. *Planting Fertilizer*: Dry formulation of 10-20-20 analysis; Penn DOT 408, Section 804.

8. *Slow-Release Nitrogen Fertilizer*: Dry formulation of 38-0-0 ureaform.

9. *Water*: Clean, fresh and free of substances or matter that could inhibit vigorous growth of grass.

B. Restoration of Lawns, Pastures, Meadows, and Cultivated Fields:

1. *General*:

   a) Topsoil shall be free from subsoil, brush, weeds, or other litter, clay lumps and stones, but may contain decaying vegetable matter.

   b) Comply with laws and regulations related to Sediment and Erosion Control.

   c) Seed shall be not more than two years old. Germination tests of seeds shall be made not more than six months prior to seeding. Do not use seed that has become wet, moldy, or otherwise damaged.

   d) Submit all seed mixture formulas to the Township for approval prior to seeding.

   e) The Extender shall be responsible for seeding all areas of bare soil, which result from his construction operations, and for producing a stand of grass in all seeded areas. Erosion, drought, or any other condition will not relieve the Extender of this requirement.

2. *Lawns*:

   a) Prior to construction, strip and stockpile the full depth of existing topsoil, but no less than six inches, from all areas to be disturbed.

   b) Scarify top of trench backfill to minimum depth of two inches before placing topsoil.

   c) Use stockpiled topsoil to bring the trench area to final grade.

   d) If stockpiled topsoil is not sufficient to provide at least six inches of topsoil over area to be restored, import sufficient topsoil to provide such coverage.

   e) Use topsoil in relatively dry state. Place during dry weather.

   f) Fine grade topsoil eliminating rough or low areas.

g) Remove stone, roots, grass, weeds, debris, and foreign material from topsoil while spreading.

h) Manually spread topsoil around trees, plants, building, and paving to prevent damage.

i) Lightly compact placed topsoil. Use roller weighing no more than 120 pounds per foot of roller width.

j) Remove surplus subsoil and topsoil from site.

k) Leave stockpile area and site clean and raked, ready to receive landscaping.

l) *Grading tolerance*: Finished surface of topsoil shall not deviate by more than 1/2 inch up or down from a straight edge or stringline placed across the trench and held on existing grade on both sides of the trench.

m) Apply lime at the rate of 800 pounds per 1,000 sq. yd.

n) Do no apply fertilizer sooner than three days after lime application.

o) Apply planting fertilizer at the rate recommended by manufacturer. Apply fertilizer after raking topsoil smooth and prior to roller compaction. Do not apply fertilizer at the same time or with the same machine as will be used to apply seed.

p) After spreading of fertilizer is complete, apply peat moss to a depth of ¼-inch over the area to be seeded.

q) Mix lime, fertilizer, and peat moss thoroughly into the upper two inches of topsoil.

r) Lightly water to aid the dispersion of fertilizer.

s) Apply seed at a rate of 21 lbs. per 1,000 sq. yd evenly in two intersecting directions. Rake in lightly. Do not seed area in excess of that which can be mulched on same day.

t) *Planting season*: March 15 to June 1 and August 1 to October 15. Areas in which trench backfilling operations are completed in other time periods shall be seeded with annual Ryegrass (Penn DOT 408, Section 804, Formula E at the rate of 10 lbs. per 1,000 sq. yd. to provide temporary protection. Permanent seeding shall then be applied later during the specified periods.

u) Do not sow seed immediately following rain, when ground is too dry, or during windy periods.

v) Roll seeded area with roller not exceeding 120 lbs. per foot of roller width.

w) Immediately following seeding and compacting, apply mulch at the rate of 1,200 pounds per 1,000 sq. yd. for straw or 320 pounds per 1,000 sq. yd. for wood cellulose fiber.

x) If straw is used for mulch, anchor straw with emulsified asphalt binder or other material approved by Engineer.

y) Apply water with a fine spray immediately after each area has been mulched.

z) At completion of Extender's work, apply slow-release nitrogen fertilizer to all seeded areas at the rate of 50 lbs. per 1,000 sq. yd.

aa) Re-seed areas that show bare spots prior to expiration of the Extender's warranty period.

3. *Pasture and Meadows*:

a) Prior to construction, strip and stockpile the full depth of the existing topsoil, but no less than 12 inches, from all areas to be disturbed. Use stockpiled topsoil to bring the trench area to final grade.

b) Remove all crushed stone and construction debris from the disturbed area.

c) *Planting season*: Perform seeding no later than the start of the next planting season following completion of trench backfilling. The planting season shall be as established by the U. S. Agricultural Service for the area of construction.

d) *Seed mixture*:
   1) Timothy: 18%
   2) Orchard Grass (Pennlate or Pennmeade): 46%
   3) Redtop: 18%
   4) Kentucky Bluegrass: 18%

e) Spread the seed using an approved seeding procedure at the rate of 22 to 25 pounds per acre.

4. *Cultivated Fields*:

a) Prior to construction, strip and stockpile the full depth of existing topsoil, but no less than 12 inches, from all areas to be disturbed.

b) Upon completion of construction, remove all crushed stone and other construction debris.

c) Use stockpiled topsoil to bring the trench area to final grade.

d) Scarify to minimum depth of 10 inches all areas that have been compacted as a result of construction operations.

SECTION 10 CLEAN-UP AND MAINTENANCE DURING CONSTRUCTION WORK

10.1 Clean-Up

During construction, surfaces of all areas including, but not limited to, Streets and driveways shall be maintained on a daily basis to produce a safe, desirable, and convenient condition.

A. Streets shall be swept and flushed after trench backfilling, and re-cleaned as dust, mud, stones, and debris caused by the work, or related to the work, again accumulates.

B. Failure of the Extender to perform this work shall be cause for the Engineer to order the work to be done by others and to charge all costs to the Extender.

C. During construction, Extender is required to provide the necessary materials and equipment to maintain dust control.

10.2 Repair or Correction of Unsatisfactory Conditions

Any subnormal or dangerous condition caused by the work, on any surface, shall be repaired and/or corrected within two hours of observation or notification of its existence. If repairs are not made with this two-hour period, the Township shall cause to have the work completed and the resulting cost will be charged to the Extender.

10.3 Temporary Pavement

The Engineer and/or PADOT may require that the Extender construct temporary pavement until conditions are suitable for placement of permanent pavement. The Extender shall continuously maintain temporary pavement until it is replaced with permanent pavement.

SECTION 11 PERMANENT PUMPING STATIONS

11.1 General

A. Only submersible type pumping stations for peak instantaneous flow rate equal to or less than 3,000 gpm will be considered acceptable, complete with separate control building and combination valve/meter vault. All pumping station designs, uses, and installations must be approved by the Engineer. The design of the pumping station shall include materials and equipment necessary to make the pumping station facilities vandalism-proof.

B. Wet well/dry pit type pumping stations for peak instantaneous flow rate greater than 3,000 gpm will be considered acceptable. The specific design of the wet well/dry pit type pumping station shall be reviewed, and must be approved, by the Engineer on a case-by-case basis. No specific guidance is given in these Technical Specifications.

C. Extender shall meet all Federal, State, and local laws, rules, regulations, and codes applicable to pumping station, building, and site design and construction and shall meet all requirements of the Commonwealth of Pennsylvania "Domestic Wastewater Facilities Manual", latest edition. All required permits and approvals shall be obtained and paid for by the Extender.

D. When a sinkhole is discovered before, during, or after construction, the Township must be notified immediately. Remediation of the sinkhole will proceed under the supervision of a geotechnical Professional Engineer, registered with the Commonwealth of Pennsylvania at the Extender's expense.

11.2 Extender's Warranty

A. The Extender shall warrant the pumping station equipment, materials, and workmanship for a period of 12 months following the date that the pumping station is dedicated to the Township. Any equipment or materials manufacturer warranties that extend beyond this 12-month warranty period shall be transferred from the Extender to the Township.

11.3 Submittals

A. Three sets of complete Construction Drawings, structural calculations, geotechnical soils reports, specifications, and hydraulic computations for the pumping station shall be submitted to the Engineer for approval. All drawings, structural calculations, reports, specifications, and hydraulic computations shall be prepared, signed, and sealed by a Professional Engineer registered in the Commonwealth of Pennsylvania.

B. Five copies of each of the following items shall be submitted to the Engineer for approval prior to installation, except Operation and Maintenance Manuals, which shall be submitted prior to dedication of the pumping station to the Township:

1. *Shop Drawings*: Submit approved manufacturer's assembly-type shop drawings indicating dimensions, weights, required clearances, and methods of assembly of components.

2. *Product Data*: Submit manufacturer's technical product data, including installation and start-up instructions, furnished specialties, and accessories.

3. *Wiring Diagrams*: Submit manufacturer's electrical requirements for pumping station, including ladder wiring diagrams for interlock and control wiring. Clearly indicate required field connections.

4. *Maintenance Data*: Submit maintenance data and parts lists for all pumping station equipment, controls, and accessories. Include lubrication schedule that shows recommended frequency and type of lubrication for each equipment item. Include trouble-shooting guide for each piece of equipment.

5. *Operation and Maintenance Manuals*: Submit five complete O&M manuals containing all items listed above under Paragraph 11.3.B. The manuals shall be organized so that all data for given equipment item is contained in a single section of the manual. Dividers shall be provided to identify the various sections. For major equipment items, a separate manual may be provided in lieu of a separate section within a larger manual.

11.4 Sitework

A. No construction work shall commence until all plans have been reviewed and all items addressed in the review have been resolved.

B. Prior to the start of any construction, the Extender shall prepare a Soil Erosion and Sedimentation Pollution Control Plan for the site, and shall obtain approval of this Plan from the Chester County Conservation District. The approved Plan must be available at the site at all times during construction. The Extender shall comply with the Plan and with any supplementary instructions from regulatory agencies having jurisdiction.

C. The pumping station shall be located on a fee-simple parcel with a minimum lot area, unless required otherwise by the Engineer or within the Township's Code of Ordinances (in which case the greatest required area shall govern), of 5,000 square feet. Lot area calculations shall be in accordance with the Township Zoning Ordinance, as amended. No portion of the building superstructure shall be closer than 15 feet to any property line or as required by any applicable subdivision/zoning ordinance, whichever results in the most stringent requirement.

D. The finished grade slope on any portion of the pumping station lot shall be no steeper than 10 percent and all unpaved areas outside the building (areas which will be seeded) shall be accessible by 60-inch wide mower. The lot shall be graded to prevent erosion of soils on the lot and in areas adjacent to the lot. Ditches, swales, culverts, and riprap shall be provided where necessary to prevent erosion and control storm runoff. Finished grade of all lot areas shall be a minimum of 2 feet above the 100-year flood elevation.

E. Access to the pumping station lot shall be provided by a minimum 14-foot wide paved access road with a turnaround. The extent of pavement around the pumping station building shall be as approved or directed by the Township. Paving shall consist of, as a minimum, 6 inches of compacted PADOT 2A coarse aggregate, 4 inches of Bituminous Concrete Base Course, and 2 inches of ID-2 Wearing Course. All materials used in pavement construction shall meet the requirements of PADOT Specifications, Publication 408 (PADOT 408), latest edition, and shall be obtained from a source approved by PADOT.

F. The entire lot shall be fenced with a black-colored PVC-coated steel chain link fence constructed to a height of 8 feet. The fence shall be topped with 3 strands of barbwire. The fence shall include a lockable chain link double swing gate with minimum clear opening of 16 feet. Locks shall match existing Township standards.

G. A 6" minimum layer of decorative river stone shall be placed in all unpaved areas within the fence line, and shall extend 2' beyond the fence line.

H. The Township requires that landscaping be used to screen the pumping station from streets and adjacent properties or to otherwise improve the appearance of the pumping station lot. The Extender shall submit the landscaping plan to the Engineer for approval. Landscaping shall be covered by the Extender's one-year warranty and the Extender shall replant trees, shrubs, and ground cover that have died or otherwise failed to develop properly. Plantings shall comply with the Township's approved list as contained in the Subdivision and Land Development Ordinance.

I. Underground electric and telephone lines shall be installed in accordance with the appropriate Utility Company's requirements. Extender shall make arrangements for and pay for all service entrances, lines, and connections required to serve the pumping station. A minimum of two (2) dedicated telephone lines shall be provided.

11.5 Structural Excavation and Backfill

A. All excavation operations shall comply with OSHA rules and regulations. Excavations shall be sheeted and shored where required to meet OSHA rules and regulations and where required to protect property and improvements adjacent to the pumping station lot.

B. Prior to the start of excavation operations, all topsoil shall be stripped from the excavation areas. Topsoil shall be stockpiled, in accordance with Chester County's Erosion and Sedimentation and Pollution Control Plan requirements, and replaced to a minimum depth of 6-inches on all areas to be seeded. All materials other than topsoil, which were cleared from the pumping station lot before starting excavation operations, shall be disposed of legally off the pumping station site at the expense of the Extender. On-site burning of cleared materials will not be permitted.

C. Blasting during clearing and excavation operations will be allowed only if prior permit is obtained, on a case-by-case basis, from the Engineer. If allowed, the use of explosives shall be governed by the "Regulations for the Storage, Handling and the Use of Explosives" of the Pennsylvania Department of Labor and Industry.

D. Structural backfill may consist of excavated material approved for re-use by the Engineer. Structural backfill shall contain no stones larger than 4-inches in any dimension. If material excavated on the pumping station site is not approved for use as structural backfill by the Township, the Extender shall import suitable backfill. Where warranted by poor soil conditions, the Engineer may require that the structural excavations be backfilled with PADOT 2B aggregate.

E. Prior to the construction of concrete foundations within the excavation(s), the entire bottom of the excavation shall be covered with a minimum 8-inch thick compacted layer of PADOT 2A or AASHTO No. 57 coarse aggregate.

F. The Extender shall submit a list of and specifications for the compaction equipment to be used for backfill compaction. In no case shall backfill be placed in lift thicknesses which exceed the equipment's compaction capability as specified by the equipment manufacturer for a given soil type. Maximum lift thickness, regardless of the equipment used, shall be 12 inches. Backfill shall be compacted to a minimum of 98 percent of standard Proctor density as determined by ASTM D698.

11.6 Structural Concrete

A. Concrete shall meet the PADOT 408 requirements for Class AAA concrete and shall be obtained from a source approved by PADOT. Portland cement used for all concrete shall be ASTM C150 Type II.

1. Reinforcing steel used in all reinforced concrete shall be deformed steel bars meeting the requirements of ASTM A615 Grade 60. Welded wire fabric, if approved by the Engineer for use as reinforcing, shall meet the requirements of ASTM A185.

2. Reinforced concrete shall be designed in accordance with ACI 318 "Building Code Requirements for Reinforced Concrete" (latest edition), ACI 350 "Environmental Engineering Concrete Structures" (latest edition), and local

building codes. The strictest requirement shall govern when differing provisions are encountered. Concrete structures shall be designed to prevent uplift and flotation (minimum Factor of Safety = 1.15) when the structure is empty and the surrounding soil is saturated to the top of concrete elevation where water would begin overflowing into the pumping station. Concrete foundation shall be designed for allowable soil bearing/bedding and to minimize differential settlement.

3. Concrete shall be placed, consolidated, and cured in accordance with the requirements of the latest editions of ACI standards 304R, 305R, 306.1, and 309R.

4. Access to the main floor of the Control Building shall be 6" above finished grade elevation.

5. *Precast Concrete Structures*: Designed to withstand a live loading for HS-25 per AASHTO Standard Specification for Highways and Bridges. Designed wheel loading at 16 kips. Live load is that loading which produces the maximum shear and bending moments in a structure. Shop drawings for each structure shall be signed and sealed by a Professional Engineer registered in the Commonwealth of Pennsylvania.

   a. *Forming*: Of sufficient design and bracing to maintain alignment under pressure during pouring and vibrating of concrete.

   b. *Reinforcing*: Bars conforming to ASTM A615 Grade 60 and wire fabric conforming to ASTM A185.

   c. *Concrete*: Portland cement conforming to ASTM C150, Type II and aggregate forming to ASTM C33. Both fine and course aggregates free of deleterious substances which cause reactivity with oxidized hydrogen sulfide. Materials accurately weighed at a certified central batching facility prior to mixing. Cement content in amounts adequate to produce a minimum strength of 5,000 psi concrete.

   d. *Placing*: Pour concrete in a continuous fashion without segregation or loss in ingredients until completion of unit. Compact concrete by mechanical internal vibrating equipment.

   e. *Curing*: Steam curing after initial set at temperatures not to exceed 160 degrees F with temperature rise above ambient not to exceed 40 degrees F per hour. After form stripping curing continued by water spray or liquid membrane curing using compounds conforming to STM C309.

   f. *Buoyancy*: Structures shall be designed to prevent uplift and flotation

(minimum factory of safety = 1.2) when the structure is empty and the surrounding soil is saturated to either finished grade or the 100-year flood elevation, whichever is higher.

B. Paint interior of all precast concrete underground structures (except manholes, which shall be painted as specified in Section 5) with two coats of Tnemec 104 High Solids Epoxy, 4-10 mils DFT per coat for a total dry film thickness of 14 mils, and paint exterior of said structures with one coat of Tnemec 46H-413 Hi-Build Tnemec-Tar, 16-20 mils DFT.

11.7 Structural Steel

A. Structural steel shapes shall meet the requirements of ASTM A36. Structural steel tubing shall meet the requirements of ASTM A500.

B. Steel shall be welded in accordance with AWS D1.1.

C. Structural steel shall be designed, fabricated, and erected in accordance with AISC Specifications.

D. Structural steel shall be coated as follows:

1. *Surface preparation*: SSPC-SP10, Near-White Blast Cleaning for steel that is immersed or in the splash zone; SSPC-SP6, Commercial Blast Cleaning for all other steel.

2. *First Coat*: Tnemec 66-Color High Build Epoxoline, minimum 6 mils dry film thickness.

3. *Second Coat*: Tnemec 104-Color High Solids Epoxy, minimum 10 mils dry film thickness.

4. For steel that is not exposed in the finished work, the second coat will not be required.

5. Where approved by the Engineer, galvanizing may be substituted for painting. Structural steel shall be galvanized in accordance with ASTM A123 to provide a minimum of 1.25 ounces per square foot of galvanized coating on all surfaces.

11.8 Control Building Design and Components

A. The Control Building shall be segregated into 3 separate rooms as follows: Control/Generator Room; Chemical Room; and Toilet Room. Ceiling height shall be a minimum of 10 feet but in no case less than required to allow for proper generator ventilation and exhaust. The building shall have sufficient floor space to provide equipment manufacturers' minimum specified repair and maintenance clearances.

1. The Control/Generator Room shall be designed to provide sufficient interior space for pumping system control panels, variable frequency drives (if applicable), sewage grinder hydraulic drive unit and control panel, emergency generator and automatic transfer switch, circular chart recorder, autodialer, and any other necessary control equipment as well as required heating, ventilating, lighting and electrical equipment.

2. The Chemical Room shall be designed to provide sufficient interior space for the chemical feed system specified subsequently in this Section, as well as required heating, ventilating, lighting and electrical equipment.

3. The Toilet Room shall be designed to provide sufficient interior space for a toilet and lavatory as specified subsequently in this Section, as well as required heating, ventilating, lighting and electrical equipment.

B. Walls: Building walls shall be cavity wall construction and shall consist of the following components:

1. *Interior walls*: Minimum 8-inch sound-absorbing concrete masonry units (CMUs); Proudfoot Soundblox Type RSC.

2. *Cavity*: The cavity located between the interior and exterior walls shall be approximately 2.5 inches wide. The cavity shall contain 2-inch thick polystyrene board insulation securely fastened to the interior CMU wall. Through-wall flashing and weepholes shall be used to convey water collecting at the bottom of the walls to the exterior of the building.

3. *Exterior Wall*: The exterior wall shall be a material selected by the Township, including, but not limited to, 8" split-face block and brick, brick, stucco, and CMU. The color and model shall be selected by the Township from the manufacturer's sample submittal.

4. *Wall Reinforcing*: CMU wall reinforcing shall be galvanized truss type with box ties for tying brick wall to CMU wall. Reinforcing shall be horizontally continuous and shall be located in every other CMU course.

5. *Bond Beams*: A continuous bond beam shall be installed as the top course of CMU walls. The bond beam shall be reinforced with two (2) No. 5 deformed steel bars and shall be filled with coarse sand/cement grout. Anchors for the wall cap plate shall be embedded in the bond beam. The cap plate shall be 2-inch thick (nominal) SPIB Utility Grade wood treated with CCA preservative to 0.25 pounds/cubic foot retention in accordance with AWPA standards.

6. *Grout*: As a minimum, fill CMUs adjacent to all wall openings and at all corners with Portland/cement grout and No. 5 bar doweled into foundation or concrete substructure.

7. *Lintels*: Lintels over all wall openings shall be steel bar reinforced precast concrete with minimum 28-day compressive strength of 3,000 psi. Minimum bearing length on each side of opening shall be 8 inches. Steel bar reinforced precast concrete lintels shall be as manufactured by York Lintel & Cast Stone, Inc., Nitterhouse Concrete Products, Inc., Penna. Precast Concrete Co., Associated Products Co., or equal.

8. Vertical wall reinforcement shall be provided in accordance with the Building Code, but shall not be less than #5 reinforcing steel bars spaced at 48" centers.

9. *Finish*: Interior walls shall be painted as follows (color shall be selected by Township):

   a. *Primer*: None, if finish is self-priming.

   b. *Filler Coat*: M.A.B. #2000 Block Filler or Acra-Bond.

   c. *Finishing*: M.A.B. Rich-Lux low-luster enamel, two coats.

C. <u>Floor</u>: Cast in place concrete with minimum 6" thickness on bed of 8" minimum thickness compacted PADOT 2A or AASHTO No. 57 aggregate. Concrete shall have a minimum compressive strength of 4,000 psi at 28 days, and shall contain 4" x 4" welded wire fabric. Provide ½" preformed expansion joint all around. Floor shall be finished with concrete sealer and chemical hardener.

D. <u>Roof Trusses:</u>

1. Roof trusses and necessary framing for the roof shall be designed by the truss manufacturer with a 2" x 6" minimum top and bottom chord. Design requirements shall address snow, wind, seismic and construction loadings in accordance with the Township's adopted building code. The roof truss submittal shall include structural calculations of the truss design, which shall be signed and sealed by a Professional Engineer registered in the Commonwealth of Pennsylvania.

E. Roofing shall consist of the following components:

1. Minimum 3/4-inch; APA Rated Sheathing 48/24, Exposure 1.

2. Unperforated No. 15 asphalt felt underlayment; ASTM D226, Type 1.

3. Fiberglass-base asphalt shingles, minimum 240 pounds per square; ASTM D3018, Type I, and ASTM D3462. Shingles shall have UL Class A fire rating and UL wind resistance label. Color and pattern will be selected by Township from manufacturer's standard range.

4. *Ridge Vent*: Alcoa ROVAR.

5. *Soffit*: Vented aluminum with minimum metal thickness of 0.019 inches; Alcoa Building Products with Alumalure 2000 finish.

6. *Fascia*: 1" x 8" wrapped with aluminum.

7. *Siding*: 4" vinyl siding shall be installed on each gable end. Color shall be selected by Township.

8. *Insulation*: 9 ½" batt.

F. Roof Drainage System: Five-inch OG aluminum gutters with minimum metal thickness of 0.032 inches and 2 x 3 inch aluminum downspouts with minimum metal thickness of 0.024 inches; Alcoa Building Products 320. Downspout shall discharge into a precast concrete splash block.

G. Ceiling: Minimum 5/8-inch thick gypsum board; ASTM C36; USG 200 Series or equal. Ceiling shall be painted as follows (color shall be selected by Township):

1. *Primer*: None, if finish is self-priming.

2. *Finishing*: M.A.B. Rich-Lux Luster Lite, two coats.

H. Attic Insulation: Minimum 9.5-inch thick unfaced fiberglass batt insulation; ASTM C855, Type I.

I. Doors and Frames:

1. *Control/Generator Room and Chemical Room*: Provide one (1) set of double doors with minimum clear opening of 6 feet. Doors shall have twenty-six inch wide ¼" wire glass panels horizontally centered, and beginning vertically at 3'-4" above finished floor extending 5" below the top of door. Minimum door height

shall be 7 feet.

2. *Toilet Room*: Provide one (1) single door with minimum clear opening of 3 feet for the Toilet Room. Minimum door height shall be 7 feet.

3. *Doors*: Insulated hollow aluminum (6063-T5) doors, 1-3/4" thick. Control/Generator Room door shall be insulated with 1" insulated glass. Chemical Room door shall be 1 ½ hour rated.

4. *Frames*: Provide aluminum (6063-T5) frames with a minimum wall thickness of 0.125 inches.

5. *Finish*: Exposed members finished free of scratches and other surface blemishes. Final finish of an Architectural Class 1 Anodic Coating (AA-M12C22A42) with integral color; Kawneer's Permanodic No. 40 Dark Bronze.

6. *Hardware*: Equip each door with the hardware as follows:

   a. 3 pairs hinges; TB 2314, 4.5 x 4.5 inches, US26D finish, NRP; McKinney.

   b. One panic rim exit device with overlapping strike; 372 x 33K x SNB; Russwin.

   c. 2 surface bolts attached to interior of inactive leaf; Ives.

   d. One flat stainless steel astragal attached to exterior of active leaf.

   e. 2 kick plates; 0.05-inch stainless steel, 8 inches high x door width minus 2 inches; Ives.

   f. One door closer attached to active leaf; P2810 BH-4-SBL; Russwin.

   g. One aluminum threshold; 185 AV; Pemko.

   h. One set of weather-stripping; 303 AV; Pemko.

   i. Locks and keys: As directed by the Township.

J. <u>Miscellaneous Painting</u>:

1. *Interior Wood Trim*: Interior wood trim shall be painted as follows (color shall be selected by Township):

   a. *Primer*: M.A.B. latex enamel undercoater.

b. *Finishing*: M.A.B. Rich-Lux latex low-luster enamel, two coats.

2. *Metal Surfaces and Trim (Interior and Exterior)*: Interior wood trim shall be painted as follows (color shall be selected by Township):

   a. Primer is not required on items delivered shop primed.

   b. Primer for non-shop primed items and field touch-up:

      1) *Ferrous*: M.A.B. Rust-O-Lastic Alkyd Primer (073 or 0739 lines).

      2) *Galvanized*: M.A.B. Hydro Primer or Rust-O-Lastic Zinc Dust Primer.

   c. *Finishing (metal deck and structural steel)*: M.A.B. line 074, Rust-O-Lastic, two coats.

K. Fire Extinguishers: Provide a minimum of one (1) 10-pound multi-purpose dry-chemical fire extinguisher with UL rating of 4A, 60B, C equipped with pressure gage, fully filled and ready for use. Mount on interior wall of Control/Generator Room inside of Control Building at location directed by the Township.

11.9 Metal Fabrications

A. Access Hatches: Aluminum; Series W1S as manufactured by Halliday Products, or approved equal.

11.10 Equipment

A. Sewage Pumps:

1. The pumping system shall include a minimum of two (2) equally sized pumps and shall be designed to handle the peak instantaneous flow, tributary to the pumping station, in accordance with PADEP's "Domestic Wastewater Facilities Manual". When peak instantaneous flow exceeds one million gallons per day (1.0 MGD), the pumping system shall include a minimum of three (3) equally sized pumps. The pumping system shall be designed to handle the peak instantaneous flow with one pump out of operation. Flow used for design purposes shall be peak instantaneous flow projected 20 years into the future.

2. Pumping station designs containing pumps discharging at 300 gpm or less may utilize an on/off control system with constant speed pumps. All other pumping stations shall be Variable Frequency Drive (VFD) operated and designed to maintain a specific water level at all times, monitored though a submersible pressure transducer and controlled/monitored through a Programmable Logic Controller (PLC). A backup float warning system consisting of the following

shall be provided for all VFD applications: High Water Alarm; Low Water Alarm; and All Pumps Off.

3. Minimum pump efficiency shall be 70 percent. Exceptions to this requirement will be granted by the Township only if it can be shown, using manufacturer's data, that this efficiency can not be achieved with pumps of the required capacity and of the specific type and manufacturer required by the Township.

4. Pumps shall be as follows:

   a. Submersible centrifugal solids handling non-clog wastewater pumps specifically designed for installation in a wet well as manufactured by: ITT Flygt, Fairbanks Morse, or approved equal. Pumping–related equipment specified below utilizes ITT Flygt manufacturer information and model numbers.

5. Submersible pumps shall be of the air filled type and shall be equipped with a cooling jacket unless the Extender submits, to the Engineer, the manufacturer's certification stating that a cooling jacket is not required. Jackets shall provide cooling action by circulating the pumped liquid around the motor. The cooling jacket shall also be equipped with fittings to provide for future use of an external source of cooling liquid.

6. Maximum rotational speed for all pumps shall be 1,800 rpm, unless otherwise approved by the Engineer.

7. All pumps shall be equipped with a seal leakage detector system.

8. *Submittals*: Extender shall submit the following items to the Township:

   a. Certified pump curves showing head vs. flow, efficiency, NPSHR, horsepower, and shutoff head. Pump curves shall be developed from factory tests performed in accordance with Hydraulic Institute Standards. Pump curves shall be shown on the design plans.

   b. One replacement impeller for each pump.

   c. Any special tools required for pump maintenance and disassembly.

   d. Manufacturer's standard municipal 5-year materials and workmanship warranty.

   e. Hydraulic calculations, signed and sealed by a Professional Engineer registered in the Commonwealth of Pennsylvania, for sizing of the pumps and wet well.

B. Sewage Pump Motors:

1. Provide squirrel-cage, premium-efficiency induction motors. All motors shall be inverter duty rated for use with a Variable Frequency Drive.

2. *Insulation System*: Class F.

3. *Temperature Rise Rating*: Class B.

4. *Enclosure*: Provide submersible, explosion-proof enclosures for submersible pumps rated for operation in a Class I, Division 1, Group D hazardous atmosphere.

5. *Service Factor*: 1.15; the service factor shall be reserved for the Township's protection. The motors shall not be loaded beyond their nameplate horsepower rating at any point throughout the entire operating range of the certified pump curve.

6. Design pumps for continuous duty under full load and to sustain a minimum of 15 starts per hour.

7. Equip motors with heavy-duty lifting lugs that will, in the case of submersible pumps, support the entire pump/motor assembly.

8. Equip pumps with sealed ball bearings designed for a minimum L_{10} life of 40,000 hours.

9. Locate conduit box so that it will be accessible in the final installation.

10. *Power Supply*: 240/480 volts AC, 3-phase, 60 Hz.

11. Equip each pump with a stainless steel nameplate that is visible in the final installation and which shows, as a minimum, the following information: manufacturer's name and address; type or style, model designation, serial number and catalog number; horsepower rating; speed in rpm; full-load current; voltage; frequency; number of phases; time rating; maximum ambient temperature; insulation class code number; power factor; and service factor.

11.11 Mechanical

A. Pipe: Raw sewage piping shall be flanged Special Class 53 ductile iron meeting the requirements of AWWA C115 and C151 and shall be lined internally with a corrosion-resistant ceramic-epoxy liner as specified in Section 7 of these Technical Specifications. The exterior of the pipe shall be painted with one coat of Tnemec 66 High Build Epoxoline to a (DFT) of 2 to 3 mils followed by a coat of Tnemec 104-Color High Solids Epoxy to a DFT of 8 to 10 mils; color to be selected by the Township.

B. Sleeve Couplings: Sleeve couplings, including flanged coupling adapters, shall meet the requirements of AWWA C219 and shall be manufactured by Dresser, Smith-Blair, or approved equal.

C. Pipe Seals: Where pipes pass through walls, a seal shall be effected by the use of cast iron wall pipes or double Link-Seal by Thunderline Corporation. Under some conditions, the Township may approve the use of single Link-Seal. All bolts shall be stainless steel.

D. Eccentric Non-Lubricated Plug Valves: Designed for a minimum working pressure at 175 psi. Provide cast iron valve body conforming to ASTM A126 Grade B or valve bodies of semisteel with coated plug suitable for wastewater and nickel or stainless steel seats. Provide full pressure, drip-tight shutoff, with rated pressure from either direction. Provide straight through, round full-port configuration. Valves 8" and larger and all chain-operated valves shall be provided with an enclosed gear operator. Acceptable manufacturer is DeZurik Series 100, or approved equal.

E. Check Valves: Provide check valves on each pump discharge line. Check valves shall be swing check with outside lever and weight. Check valves shall be manufactured by GA Industries, Dresser, or approved equal. Check valves shall, in all cases, be installed in a horizontal position. Under conditions of high head, the Township may require the installation of air-controlled or oil-controlled swing check valves by GA Industries, APCO, or approved equal.

F. Sewage Surge Relief Valves: Under high head conditions, the Township may require the installation of a sewage surge relief valve. The surge relief valve shall be manufactured by GA Industries, or approved equal. The surge relief valve shall open and discharge to the wet well when the pressure in the discharge piping reaches a point 10% above pump shutoff head.

G. Air Valve: A combination single-body sewage air valve shall be located at the high point of the discharge header. The air valve shall be APCO SCAV Series, or approved equal, and shall be equipped with backflushing accessories.

H. Pressure Gages: A pressure gage shall be installed on each pump discharge line, as well as on the discharge force main header in the Valve/Meter Vault downstream of the bypass tee. The gage shall read in psi to 100 percent above the pump shutoff head. PSI readings shall be in increments of 2 PSI. The gage shall be liquid filled, shall have a stainless steel case and safety glass window, and shall be a minimum of 4 inches in diameter. Each gage shall be installed on a Ronningen Petter Iso-Ring with an isolation valve.

I. Pipe Supports: Concrete and/or steel pipe supports shall be installed to prevent movement of the pipe system during pump startup and shutdown and to assure that the pumps do not carry any of the piping system weight.

11.12 Plumbing

A. Piping: Potable water piping (interior) shall be Type L hard-temper copper with solder (sweat) joints. Exterior potable water piping shall be Type K annealed copper with brazed or flared joints. Drain piping shall be PVC Schedule DWV with solvent weld joints.

B. Wall Hydrant: Provide one (1) ¾" exposed, non-freeze wall hydrant along an exterior wall of the Control Building. Wall hydrant shall be Zurn Industries, Inc. Model Z1315, or approved equal.

C. Backflow Preventer: A reduced pressure backflow preventer shall be provided inside the Control Building to protect the potable water system from contamination. The backflow preventer shall be as specified under the cross connection regulations.

D. Floor Drain: Manufactured by Zurn Industries, Inc.

E. Emergency Eyewash: An emergency eyewash fountain shall be mounted in an interior wall of the Chemical Room. Eyewash shall be wall-mounted design, corrosion resistant stainless steel bowl with twin aerated eyewash heads activated by stainless steel push flag handle chrome-plated 1/2-inch I.P.S. stay open ball valve.

1. *Water Supply*: 1/2-inch I.P.S.

2. *Waste*: Dome type strainer and 1¼-inch drain.

3. *Identification Sign*: 14 x 3-inch aluminum sign designed for wall mounting with the words "EMERGENCY EYEWASH FOUNTAIN".

4. *Acceptable Manufacturers*:

   a. Bradley Corporation; Model S1922, SB-SR.

b. Haws Drinking Faucet Company; 7760-B.

c. ENCON; 455.

d. Or Equal.

F. Toilet Room: The Toiler Room minimum footprint shall be 5'-0" x 5'-0", and shall contain the following fixtures:

1. *Lavatory*: Enameled cast iron design as manufactured by American Standard, Kohler, Eljer, or equal. Provide combination water heater/mixing faucet designed to deliver 6.25 gal/hr at 110^0F, Model/UWL as manufactured by In-Sink-Erator.

2. *Water Closet*: Water-saver, vitreous china, siphon jet action as manufactured by American Standard, Kohler, Eljer, or approved equal, with chrome plated flush valve as manufactured by Sloan, Delaney, or approved equal.

3. *Drain Piping*: Route drain piping from above fixtures to the wet well. Provide flap valve on drain line at point of entry into wet well.

4. Furnish and install a toiler paper holder, paper towel holder and soap dispenser.

11.13 Heating and Ventilating

A. Heating: Each room of the Control Building shall be heated by means of electric unit heater(s). The heater(s) shall be sized and located to maintain the temperature within the room at no less than 50 degrees F when the outside ambient temperature is minus 15 degrees F. Heaters shall be Chromalox Model LUH or HCH, or equal, with built-in thermostats. Thermostats shall have single pole double throw switches.

B. Ventilating:

1. *Wet Well and Valve/Meter Vault*: The wet well and valve/meter vault shall each be ventilated when an access hatch is opened at the minimum rate of 30 complete air changes per hour. The supply fan shall be a centrifugal fan as manufactured by Penn Ventilation Dynamo series, and shall be equipped with a motor/drive weather cover, vibration and isolation mounts, inlet guard, gasketed access door for maintenance, outlet flange, and weather and corrosion resistant epoxy coating. One supply fan, if adequately sized, may be utilized for both the wet well and valve/meter vault. Ventilating ductwork shall be PVC Type 4x4 as manufactured by Sheet Metal Connectors, Inc. Duct shall be manufactured in accordance with SMACNA standards. Manufacturer's instructions shall be followed for all duct installations.

2. *Control/Generator Room and Chemical Room*: The Control/Generator Room and Chemical Room shall each be thermostatically controlled and ventilated at the minimum rate of 12 complete air changes per hour.

3. *Chemical Room*: The Chemical Room shall be equipped with an intake louver mounted in the exterior wall. Intake louver shall be 2' x 2', fixed with motorized damper and insect screen, mounted 24" above finished floor.

4. *Toilet Room*: A brick vent intake shall be mounted in the exterior wall. Brick vent shall be 15 7/8" W x 7 ¾" H, equipped with opposite blades, damper and insect screen, mounted 7'-0" above finished floor.

5. *Control Building Roof*: Exhaust fans shall have gravity backdraft damper, hinged subbase, insect screen, safety disconnect switch, and roof curb. In lieu of roof-mounted exhaust fans, for aesthetic purposes, ceiling-mounted exhaust fans with discharge to architectural-style fixed louvers (fit with bird screens) located on gable ends of Control Building, will be considered on a case-by-case basis.

6. *Vent Pipes*: Horizontal vent pipes shall be sloped back to the fixture drain pipe or to the drain pipe.

11.14 Emergency Generator

A. Furnish and install one (1) emergency generator in the Control/Generator Room of the Control Building. Emergency generator shall be manufactured by Cummins Power Generation, or approved equal, sized to provide 110% back-up power for the entire pumping station in the event of an electrical utility company power outage.

B. The generator shall be equipped with critical grade muffler, battery charger, batteries and cables, line circuit breaker, standard generator set control panel with common fail output contact, AC meter package, frequency meter, running time meter, and all fluids.

C. The generator set manufacturer shall provide field start-up, testing, test report, and certification.

D. Foundation: Provide separate reinforced concrete foundation for generator flush with floor slab. Generator foundation shall be 3" longer and wider than the generator with ½" expansion material and joint sealant all around to isolate the generator foundation from the floor slab. Generator foundation should rest on compacted free draining fill material (if unsuitable soft soils are encountered at subgrade, further excavation and placement of fill material is required).

E. Fuel System:

1. The engine shall be capable of operating on No. 2 diesel fuel.

2. The fuel supply line shall be black steel (no galvanized). Supply (fill) line shall be extended through exterior wall and terminated with a 45 degree bend and threaded cap.

3. The fuel storage tank shall be a dual wall subbase tank provided as an integral part of the generator package for diesel engines. The tank shall be sized to provide a run-time of 24 hours at full load.

4. Fuel tank vent pipe shall vent outside. Fuel tank vent pipe shall be fit with a whistler in order to tell when the tank is near capacity while being filled.

F. Exhaust System: The exhaust system shall consist of a critical grade side-entry silencer, a flexible stainless steel exhaust connection to engine, a drip leg at the first point of rise of exhaust line, a condensate trap and manual valve, and horizontal exhaust lines that slope toward discharge. The muffler and exhaust piping shall be insulated with 2" minimum thickness rigid hydrous calcium silicate to maintain a surface temperature not to exceed 120 degrees F. Do not insulate flexible exhaust fitting. No asbestos shall be allowed. Exhaust line shall extend 1'-6" beyond the exterior wall, and terminate with a stainless steel hinged flapper.

G. Combustion and Cooling Air System:

1. The intake louver shall be mounted 24" above finished floor on an exterior wall of the Control/Generator Room. Intake louver shall be fixed with motorized damper and insect screen, power close, spring open, and shall be appropriately sized for the application. Louver color shall be selected by the Township.

2. The discharge louver shall be mounted 24" above finished floor on an exterior wall of the Control/Generator Room. Discharge louver shall be fixed with gravity damper and insect screen, and shall be appropriately sized for the application. Ductwork and flexible duct adapter shall be installed between the discharge louver and the engine radiator. Louver color shall be selected by the Township.

H. Automatic Transfer Switch: The automatic transfer switch (ATS) shall be supplied by the generator manufacturer as a package with 7-day load/no-load exercise clock, battery charger, standard time delays including two-second loss-of-power delay on start, emergency/normal door mounted indicator lights, one NO and one NC auxiliary contacts for each normal and emergency position, test switch, and solid state controls. House the transfer switch in a NEMA 12 enclosure of the motor control center (when motor control center is provided). The ATS shall be located in the Control/Generator Room of the Control Building.

I. Testing: The Extender shall provide an eight-hour full load test of the generator at the site after finalizing the project. Use load banks for performing the test. Submit a test report to the Engineer.

11.15 Electrical

A. General:

1. Comply with the National Electrical Code (NEC) in performing all electrical work. In addition, comply with electrical construction code requirements of State and local agencies and requirements of electrical Utility Company. Provide electrical equipment that is listed by Underwriters Laboratories, Inc. (UL).

2. Obtain and pay for all required electrical system permits and approvals. Upon completion of the electrical work, have it inspected by an authorized inspection agency for compliance with NEC and State and local codes. Obtain certificates of approval, acceptance, and compliance. Submit permits and certificates to the Township.

B. Earthwork: Perform all excavation, trenching, and backfilling required for underground conduit and outdoor equipment pads. Backfill shall be in layers not exceeding 8 inches in thickness and shall be thoroughly compacted. Soil or crushed rock materials used for backfill shall not contain stones with any dimension greater than 2 inches and shall not contain organic material.

C. Reinforced and Plain Concrete: Underground ductbanks shall be encased in concrete with 28-day compressive strength of 3,000 psi. Equipment pads shall be constructed of PADOT Class A reinforced concrete. Outdoor concrete equipment pads shall be constructed on an 8-inch compacted base of AASHTO No. 57 coarse aggregate. Indoor equipment pads shall be mounted on a 4-inch high curb or pad of reinforced concrete.

D. Conduit:

1. *Interior Non-corrosive Areas*: Rigid metal conduit and fittings. Conduit inside of Control Building shall be painted the same color as the interior walls of the Control Building.

2. *Wet Well*: PVC coated rigid thick-wall metal conduit and fittings by Robroy Industries.

3. *Underground*: Rigid high-impact PVC conduit and fittings. Use Schedule 40 conduit and fittings except where NEC requires Schedule 80. All underground conduit bends shall be long-radius steel.

4. *Connections to Motorized Equipment*: Flexible liquid-tight metal conduit with PVC jacket, in lengths not exceeding 24 inches.

E. Boxes: Outlet, switch, junction, and pull boxes shall be cast steel. In hazardous and corrosive areas, hubs shall be cast integrally with the box. Boxes in the wet well shall be PVC coated. Use UL listed "wet location" boxes in outdoor and wet areas. Pressed steel boxes may be used for general interior work.

F. Wire and Cable:

1. Use single-conductor copper stranded wire, except that conductors 10 AWG and larger may be solid. Size wire and cable as follows:

   a. *Power Circuits*: Minimum size of 12 AWG.

   b. *Control and Alarm Circuits*: Minimum size of 14 AWG.

   c. *Signal Circuits*: 2/C #18 AWG shielded, 300-volt insulation.

2. Insulation shall be rated for 600 volts and type shall be as follows:

   a. *8 AWG and Smaller*: THHN/THWN/XHHN.

   b. *6 AWG and Larger*: RHW (EPR Type) with overall sheath of polyethylene.

   c. *All Submerged Wire and Cable*: Hypalon jacketed SPC.

G. Grounding: Grounding and bonding shall be provided in accordance with NEC and basic materials shall be as follows:

1. *Ground Rods*: 3/4-inch by 10 feet long Copperweld.

2. *Ground Conductors*: Code gage stranded copper or equivalent ampacity copper-clad cable.

3. *Ground Clamps*: Thermite weld.

4. *Conduit Ground Bushings*: Galvanized malleable iron with screw pressure connector and, where required, insulated throat.

H. Wiring Devices:

1. *Switches*: Specification Grade meeting requirements of Federal Specification (FS) W-S-896 and NEMA WD-1-2. Switches shall have screw terminals; push-in terminals are not allowed.

2. *Receptacles*: Specification Grade meeting requirements of FS W-C-596 and NEMA WD-1-3.

3. *Toggle-handle Snap Switches*: 20-amp, single-pole, double-throw, 3- or 4-way, with metal cover plate.

4. *Weatherproof Wiring Devices*: Enclosed in cast aluminum weatherproof box with gasketed metal weatherproof cover. Provide "in-use" weatherproof covers where required by the NEC.

5. *Standard Face Design Receptacles*: Specification Grade, 20-amp, two-pole, 3-wire, grounding duplex, with metal cover plate.

6. *Ground Fault Interrupter Receptacle*: 20-amp.

7. *Power Outlet Receptacles*: Simplex, heavy-duty design, polarized, twist-lock.

I. Disconnect Switches: UL listed safety switches meeting NEMA KS-1 and UL 98 standards, heavy-duty, horsepower rated, fusible or non-fusible (as necessary), enclosure rated for duty, padlockable OFF; Square D or equal.

J. Fuses: UL listed Class RK, Class J, or Class L. Provide 10 percent spare fuses of each rating (minimum 3 per rating).

K. Nameplates: Provide engraved phenolic nameplates on each panel, cabinet, motor starter, enclosed circuit breaker, disconnect switch, and all other electrical system components that require identification. Nameplates shall be attached by means of rivets.

L. Service Entrance: Meet requirements of electric Utility Company. Coordinate service entrance work with Utility Company and pay all costs required to provide a suitable service entrance.

M. Branch Circuit Panelboard: Provide dead-front safety type panelboard equipped with automatic thermal-magnetic circuit breakers, copper bus bars, enclosure with cover, lock, and typed directory. The short circuit withstands and interrupting rating shall be no less than 10,000 symmetrical RMS amps. Panelboard shall be Square D Type Class 1670 Type NF, or Class 7400 Mini Power Zone.

N. Variable Frequency Drives (VFDs): When VFDs are required, they shall be as manufactured by Saftronics, Allen-Bradley, or approved equal. VFDs shall be programmed such that the minimum flow rate in the discharge force main is sufficient to sustain a minimum velocity of 2 feet per second in the force main.

1. VFD shall convert fixed frequency, 3-phase voltage input power to a symmetrical 3-phase, pulse-width modulated (PWM) adjustable output frequency and voltage for controlling the speed of a standard NEMA Design B, 3-phase, AC induction motor.

2. Drive shall accept incoming 480 VAC, 60 Hz line power.

3. Provide manual speed adjustment to permit variation of drive speed when operating in the manual mode.

4. When operating in the automatic mode, drive speed shall be controlled by a 4-20 mA input signal.

5. VFD shall be provided with a digital display and keypad for input programming. Keypad shall be capable of controlling the VFD and setting drive parameters. Display shall, as a minimum, provide indication of output speed in percent of base speed, output frequency, motor amps, output motor volts, and output load. The display shall also function as a fault indicator.

6. *Remote Run Input*: Causes drive to start and stop when drive is in auto mode.

7. *Drive Run Dry Contact Output*: Activates whenever drive is turned on.

8. *Drive Fail Dry Contact Output*: Activates on internal drive fault.

9. *Analog Inputs*: 4-20 mA, controls motor speed in auto mode.

10. VFDs shall be programmed to run at 60 Hz. In the event of a loss of speed, reference signal when operating in the automatic mode.

11. *Drive Type and Size*: Extender shall be responsible for providing proper type and size drive for the driven load.

12. *Enclosure*: NEMA Type 1 construction.

O. Lighting:

1. *Control/Generator Room*: Furnish and install three surface-mounted (3) 4-foot industrial fluorescent, spec. grade, 15% uplight, porcelain enamel finish, energy efficient, rapid start, thermally protected, high power factor, 120V ballasts as manufactured by Columbia Lighting (Cat. No. KL4-240-LE120). Furnish and install two (2) F40/CW lamps per ballast.

2. *Chemical Room*: Furnish and install one (1) surface-mounted 4-foot industrial fluorescent, spec. grade, 15% uplight, porcelain enamel finish, energy efficient,

rapid start, thermally protected, high power factor, 120V ballast as manufactured by Columbia Lighting (Cat. No. KL4-240-LE120). Furnish and install two (2) F40/CW lamps per ballast.

3. *Toilet Room*: Furnish and install one (1) wall-mounted 2-foot fluorescent, spec. grade, up/downlight, thermally protected, energy efficient, 120V, U.L. listed for damp locations, ballast as manufactured by Columbia Lighting (Cat. No. KWAL2-1U1D20-0-120). Furnish and install two (2) F20T12/CW lamps per ballast.

4. *Valve/Meter Vault*: Furnish and install two (2) enclosed and gasketed incandescent fixtures, wall and junction box mounted (as high as possible), 120V with globe and guard as manufactured by Crouse-Hinds (Cat. No. VXHBF25GP). Furnish and install one (1) 150W/A21 lamp per fixture.

5. *Wet Well*: Furnish and install two (2) explosion proof, wall bracket mounted, incandescent fixture with globe and guard, 120V, suitable for operation in Class I, Division 1, Groups C and D hazardous atmosphere, as manufactured by Crouse-Hinds (Cat. No. EVBX-215). Furnish and install one (1) 200W/A23 lamp per fixture.

6. *Control Building Exterior*: Furnish and install two (2) exterior wall-mounted HPS, bronze polycarbonate access door/prismatic lens assembly, bronze die cast aluminum rear housing with photo cell, 120V fixture as manufactured by Hubbell (Cat. No. PVL-0070S-118). Furnish and install one (1) C70S62/C lamp per ballast.

P. Explosion Proof Requirements: All electrical equipment and devices installed within the wet well and valve/meter vault shall be explosion proof as recommended by NFPA 820.

11.16 Telephone Systems

A. Service Entrance: Meet requirements of telephone Utility Company. Coordinate service entrance work with Utility Company and pay all costs required to provide a suitable service entrance.

B. Hand Set: Provide a factory assembled touch-tone, single-line beige plastic telephone equipped for wall mounted at a modular jack. Provide a one-year warranty. Hand set shall be either Bell of PA, GTE, ITT, or AT&T.

C. Autodialer:

1. Provide self-contained, automatic, microprocessor-controlled real-voice telephone dialer connected to a standard dial-up telephone line by means of a standard

modular jack. Mount autodialer 48" above finished floor in the Control/Generator Room.

2. Autodialer shall be housed in a heavy-gage JIC and UL listed steel cabinet.

3. The unit shall operate from a standard 120-volt AC circuit and shall be provided with batteries for 24-standby operation. An external surge suppression system shall be provided for both power supply and telephone line.

4. The autodialer shall include a separate power failure monitor and provisions for the following independent alarm conditions plus a minimum of two spares: wet well high level, wet well high-high level, wet well low level, pump failure (for each pump), damper failure (Control/Generator Room intake), generator failure, and sewage grinder failure.

5. The autodialer shall be RACO Verbatim.

11.17 Instrumentation and Controls

A. Flow Measurement System: The flow measurement system shall consist of an in-line magnetic flow meter (mag meter), an integral transmitter, and a circular chart recorder. The mag meter shall be located in the valve/meter vault. To optimize meter accuracy, the meter and vault shall be strategically located to provide a minimum of ten straight pipe diameters upstream of the meter and five straight pipe diameters downstream of the meter. "Straight pipe" refers to the absence of valves, bends and fittings. Meter and transmitter shall be FM Class I, Division 1, Groups C&D approved.

1. The mag meter shall be provided with flat flanges for installation and ground rings when required. The mag meter shall be Endress & Hauser Series Promag 50W, or approved equal. The pumping system shall be designed and the mag meter sized such that the minimum velocity through the meter during any pump operating scenario shall be 2 fps. The minimum meter accuracy shall be +/- 0.5% of rate of flow between velocities of 2 and 33 fps. Furnish one (1) flanged spool piece equal in laying length to the mag meter.

2. The transmitter shall provide a 4-20mA output, proportional to flow.

3. The circular chart recorder shall be 10" diameter Chessel Model No. 392, or approved equal. Chart recorder shall be single-pen with totalizer, on-site configuration, 40-character display, EEPROM memory, and retransmission. Provide 1-year supply of charts.

B. Pump Control Methodology: The following methodology is specific to duplex pumping systems. Similar methodology for triplex pumping systems shall be

submitted to the Engineer for review and approval.

1. When the selector switch is in the OFF position, the pump shall not operate.

2. When the selector switch is in the HAND position, the pump shall operate regardless of the level in the wet well.

3. When both selector switches are in the AUTO position, the pumps shall be controlled automatically by the primary level control system, the redundant float switch system, and the alternator as follows:

   a. The control circuit is placed in "permissive start" mode when the liquid level rises to the lowest level activation point, which is a float-switch function. The float switch is a redundant pump shutoff and low wet well level alarm system that is located just below the primary level control system point that normally activates the pump shutoff and low wet well level alarm functions.

   b. As the liquid level continues to rise, the control circuit is energized when the primary level control system low-level point is reached.

   c. As the liquid level continues to rise and the next primary level control system activation point is reached, the lead pump starts. In this step, the pumps will alternate on successive cycles. If pump #1 starts first on one cycle, pump #2 will start first on the next cycle.

   d. As the liquid level in the wet well is pumped down, the lead pump will continue to operate until the liquid level drops just below the primary level control system pump off point and the lead pump is then shut down.

C. Pump Controller System:

1. The following requirements pertain to pumping systems with VFDs. Pump control panel shall be furnished by the pump supplier and shall include, but not necessarily be limited to, the following:

   a. *Enclosure*: NEMA 12.

   b. *Primary Pump Controller*: Flygt/Multitrode pump controller with VFD option and Monitor Pro panel-mounted interface terminal, and U.S. Filter pressure transducer (Model No. A-1000).

   c. *Backup Pump Controller*: Flygt/Multitrode pump controller with five (5) float switches. Flat switches shall be chemical resistant polypropylene encapsulated casing, mercury switch with integral 12/2 Type SJO neoprene cord.

d. Monitor Pro and backup pump level controller keypad shall be mounted on the door of the control panel.

e. Backup pump controller shall be activated automatically in the event of any primary pump controller failure and shall provide a controller failure alarm.

f. Interconnection wiring between the pump control panel and the VFDs shall be in accordance with the manufacturer's wiring diagrams and instructions.

g. *Power Requirements*: 120V, 1-phase.

2. The following requirements pertain to pumping systems <u>without</u> VFDs. Pump control panel shall be furnished by the pump supplier and shall include, but not necessarily be limited to, the following:

   a. *Enclosure*: NEMA 12.

   b. Lockable panel main disconnect switch operable from outside the enclosure.

   c. Thermal/magnetic circuit breaker for each motor.

   d. NEMA rated motor starter for each motor.

   e. Through-door overload reset button for each pump.

   f. Elapsed time run meter for each pump motor.

   g. Phase loss/under voltage protection with automatic reset for each motor.

   h. Control power transformer with NEMA fusing. Control power: 120 VAC.

   i. *Primary Pump Controller*: Flygt/Multitrode pump controller with U.S. Filter pressure transducer (Model No. A-1000).

   j. *Backup Pump Controller*: Flygt/Multitrode pump controller with five (5) float switches. Flat switches shall be chemical resistant polypropylene encapsulated casing, mercury switch with integral 12/2 Type SJO neoprene cord.

   k. Pump level controller keypads shall be mounted on the door of the control panel.

   l. Backup pump controller shall be activated automatically in the event of any primary pump controller failure and shall provide a controller failure alarm.

m. *Power Requirements*: 480V, 3-phase.

n. Hand-Off-Auto selector switch for each motor. In the auto mode, the pump motor shall be controlled by the primary or back-up pump controller.

D. Miscellaneous Control System Devices:

1. *Limit Switches*: Lever-arm type, DPDT, 10-amp contacts, 120-volt AC, with NEMA 4X enclosure and standard pre-travel spring return; Square D Class 9007, Type C.

2. *H-O-A Switches and Pushbuttons*: Oil tight.

3. *Indicator Lights*: Push-to-test, transformer type. Indicator lights shall continuously glow dim to verify bulb condition and then glow at full brilliance when energized. Indicator lights shall be color coded according to function.

4. *Control Relays and Timers*: Relays shall be general-purpose type with contact rating of not less than 10 amps at 120 volts AC. Each relay shall be equipped with dust cover and quick-disconnect terminals. All relays and timers shall be mounted in sockets.

11.18 Valve/Meter Vault

A. General: One (1) precast reinforced concrete valve/meter vault shall be installed downstream of the wet well.

B. Ventilation: Provide mechanical ventilation as previously specified. Also, provide a 4" 304SS gooseneck exhaust vent with mesh bird screen located a minimum of 24" above the top of wet well.

C. Access Hatch: Provide one (1) access hatch as previously specified. Size and location of access hatch shall be approved by the Township. Equip hatch with hatch drain. Hatch limit switch (which triggers supply fan operation and lights) shall be 120 VAC, DPST explosion proof, Square 'D' class 9007 or approved equal. Limit switch shall be mounted on the hatch frame in such a manner that the contacts are open when the hatch is closed, and the contacts close when the hatch is opened.

D. Paint: Refer to Section 11.6.B.

E. Manhole Steps: Copolymer polypropylene manhole steps at 12" spacing.

F. Safety Post: Bilco Model LU-4 Ladder Up Safety Post.

G. Lighting: Fixtures as previously specified. Lights shall come on when access hatch is opened.

H. Receptacle: One (1) receptacle, duplex, 20A/125V/2P/3W, to be mounted 18" above finished floor near sump pump.

I. Sump Pump: One (1) 12" x 12" x 12" sump and sump pump. Sump pump shall be floor mounted submersible type with float, simplex with double mechanical seals and cast iron construction, rated for 20 gpm minimum, 115 VAC, 60 Hz, 1-phase. Sump pump motor shall be ½ HP, UL Listed, Class 1 Division 1 Groups C&D explosion proof. Sump pump shall be manufactured by Weil Pump Company, Inc. or approved equal. Discharge shall be 2" diameter PVC. Sump pump shall discharge into wet well or French drain located near the valve/meter vault.

J. Bypass Connection: Install a tee with a blind flange (facing vertically upward) on the force main to serve as a bypass connection point.

11.19 Wet Well

A. General: Wet well shall be precast reinforced concrete. Wet well shall be sized and level settings shall be selected to conform with detention time requirements identified in the Commonwealth of Pennsylvania "Domestic Wastewater Facilities Manual" (latest edition), and to limit the number of starts per pump per hour to no more than fifteen, unless recommended otherwise by the pump manufacturer.

B. Fillet: Provide grouted fillet along interior seam of vertical walls with bottom of wet well.

C. Ventilation: Provide mechanical ventilation as previously specified. Also, provide a 4" 304SS gooseneck exhaust vent with mesh bird screen located a minimum of 24" above the top of wet well.

D. Lighting: Fixtures as previously specified. Lights shall come on when access hatch is opened.

E. Access Hatch: Provide access hatch (or hatches) as previously specified. Sizes and locations of access hatches shall be approved by the Township. Hatch limit switch (which triggers supply fan and operation and lights) shall be 120 VAC, DPST explosion proof, Square 'D' class 9007 or approved equal. Limit switch shall be mounted on the hatch frame in such a manner that the contacts are open when the hatch is closed, and the contacts close when the hatch is opened.

F. Paint: Refer to Section 11.6.B.

G. Slide Rails: Pump and sewage grinder slide rails and supports shall be 304 stainless steel.

H. Davit Crane: Provide one (1) stainless steel portable hoist (davit crane) with stainless steel floor mounted socket(s) strategically located on the top of the wet well to access each pump and sewage grinder, and not hinder movement of the access hatch doors. Davit crane shall be Series DA or DB as manufactured by Halliday Products, or approved equal, and shall be rated to handle the entire weight of each pump or sewage grinder, which ever is heavier, with a minimum 10% safety factor. The portable hoist manufacturer shall furnish one ¼" stainless steel cable for each pump and sewage grinder. Each cable shall be 30' minimum length and shall include a safety hook. Portable hoist shall be normally stored in the Control Building.

I. Ladder: The wet well shall be provided with a 16" wide full-depth 304 stainless steel ladder (and Bilco Model LU-4 Ladder Up Safety Post) with rungs at 12" spacing.

J. Entry: A note shall be placed on the Construction Drawings stating that all entrants into the wet well shall utilize a tripod and harness suitable for confined space entry.

11.20 Chemical Feed and Storage System

A. General: Furnish and install one (1) complete chemical feed and storage system in the Chemical Room of the Control Building. Chemical shall be utilized for odor control purposes. Chemical shall be dripped into the wet well. All products described below shall be provided by U.S. Filter David Products, and shall conform to the manufacturer's standard requirements.

B. Chemical: Bioxide®.

C. Storage Tank: Furnish and install one (1) chemical storage tank. Tank shall be 550 gallon, 4' diameter, 6.5' high, manufactured of High Density Cross Linked Polyethylene (HDXLPE). Tank shall be equipped with a 2" fill line with ball valve extending through the exterior vertical wall of the Control Building, a ½" sight tube extending through the exterior vertical wall of the Control Building, and a 3" vent.

D. Control Panel: Control panel shall be manufacturer's standard as recommended by the manufacturer for the specific application. Control panel enclosure shall be NEMA 3R.

E. Chemical Feed Pump: Furnish and install two (2) chemical feed pumps (one primary, one standby). Pumps shall be bellows type, Model No. 15907-001, flow range from 5 – 50 mL/min., 40 psi maximum discharge pressure, 115V, 60Hz, 0.034 HP, 1-phase.

F. Chemical Feed Tubing: Furnish and install two (2) ½" chemical feed tubes between the chemical feed system and the wet well via a 3" PVC conduit.

11.21 Sewage Grinder

A. General: Furnish and install one (1) sewage grinder in the wet well with remote hydraulic drive unit located in the Control/Generator Room of the Control Building. Sewage grinder shall be mounted along the interior wall of the wet well where the influent line enters the wet well. Sewage grinder shall be Muffin Monster series as manufactured by JWC Environmental.

B. Grinder Unit: The equipment manufacturer shall furnish Type 304 stainless steel wall mount frame, slide rail system, lifting bail and trash basket for the grinder unit in the wet well. The trash basket shall be utilized if and when the grinder unit is removed from the wet well.

C. Hydraulic Motor: Hydraulic motor shall be a 5 HP Hydraulic Power Pak, 480V, 3-phase, 60 Hz. Motor shall be mounted on a 3" skid furnished by the equipment manufacturer. Equipment manufacturer shall furnish hydraulic fluid initial fill.

D. Control Panel: Sewage grinder hydraulic motor and control panel shall be frame mounted as a single unit. Controller Model No. shall be PC2240, and controller enclosure shall be NEMA 4X FRP.

E. Hydraulic Lines: Equipment manufacturer shall select (type, diameter and length) and furnish all required hydraulic lines and appurtenances, including quick disconnect fittings. The length of hydraulic lines shall be sufficient to permit equipment removal. Hydraulic lines shall be connected from the hydraulic motor in the Control/Generator Room of the Control Building to the grinder unit in the wet well via a 4" PVC conduit. Where the conduit enters the Control Building and wet well, the conduit shall be fit with conduit seals meeting the requirements of the National Electrical Code, latest edition, to prevent sewer gases from entering the Control Building. At the approximate midpoint of the conduit run, a 4" tee shall be installed with a 4" vertical riser extending 6" above finished grade with a mushroom cap.

11.22 Testing

A. Extender shall demonstrate to the satisfaction of the Engineer the mechanical performance of each item of equipment when operated in accordance with the design intent indicated by the Technical Specifications and Construction Drawings.

B. A minimum of two (2) volumetric wet well drawdown tests shall be performed on each pump to verify the design capacity of each pump. The Engineer reserves the right to require additional tests.

SECTION 12 *RESERVED FOR FUTURE USE*

SECTION 13 GRINDER PUMPING SYSTEMS

13.1 General

A. Gravity collection systems shall be utilized to the greatest extent practicable. The use of grinder pumping systems for individual single-family dwellings will be considered by the Township on a case-by-case basis. In order to obtain approval of a grinder pumping system, the Owner or Extender shall submit the following information to the Township:

1. The number of dwelling units for which a grinder pumping system is proposed.

2. Capacity and horsepower for the proposed pump.

3. Size and construction of the wet well.

4. Details of the electrical power, control, and alarm systems.

5. Size and material of proposed pump discharge line and associated valves.

6. Details of the connection to the Public Sewer.

7. Proposed location of all system components.

8. Design computations.

9. Copies of permits and approval notifications from agencies other than the Township.

B. Plans and specifications for all proposed grinder pumping systems must be reviewed and approved by the Engineer before installation.

C. Following approval by the Engineer, the Owner or Extender will be responsible for all costs associated with construction of the system, for all permit and approval costs, and for all costs which may result from damage to the Public Sewer, or to other utilities and facilities, during construction of the system. The Owner or Extender shall be responsible for continuously maintaining the system after installation.

13.2 Equipment

A. Grinder pumping system for each single-family dwelling shall be as follows:

1. Grinder pumping system shall be Model E|One GP2010 grinder pumping station as manufactured by Environment One Corporation, complete with a pre-fabricated and pre-assembled HDPE basin system (70-gallon minimum capacity), submersible progressing cavity grinder pump, check valve, control panel, and

associated piping, valves, wiring and appurtenances. The complete grinder pumping system shall be UL Listed and NSF Certified.

2. Grinder pumping system shall be the simplex (single-unit) type, and shall be installed as shown in the Standard Details.

3. For new residential developments, the Extender shall provide the Township with one spare grinder pump for every five (5) grinder pumps installed.

4. No grinder pump shall be installed indoors. All grinder pumps shall be installed outdoors as shown in the Standard Details.

5. Gate and check valves shall be installed in the wet well of each grinder pump system.

13.3 Installation

A. Grinder pumping system shall be installed as shown in the Standard Details.

B. Grinder pumping system shall also be installed in accordance with the manufacturer's instructions. Where a conflict may exist between the Standard Details and the manufacturer's instructions, the Standard Details shall govern unless otherwise approved by the Engineer.

SECTION 14 OIL AND GREASE INTERCEPTORS

14.1 General

A. When Sanitary Sewage and/or Industrial Waste, which is being discharged to the Public Sewer, contains excessive (greater than 25 mg/l) oil and/or grease as determined by the Township, oil and/or grease interceptors shall be installed.

B. Installation plans and specifications for proposed oil and grease interceptor systems shall be submitted to the Engineer for review and approval prior to the start of installation. Installation shall not be started until approval of the system has been obtained from the Engineer.

C. The minimum volume of oil and grease interceptors shall be 1,000 usable gallons.

SECTION 15 SAMPLING AND FLOW MEASUREMENT

15.1 General

A. Any non-residential entity that discharges or is projected by the Engineer to discharge 5,000 gallons per day or more of Sanitary Sewage to a Public Sewer, and any residential development that generates or is projected by the Engineer to generate 5,000 gallons per day or more of Sanitary Sewage to a Public Sewer and whose discharge does or will not be conveyed through a metered on-site pumping station, shall install at the expense of the Owner or Extender a Metering/Sampling Facility on the Building Sewer to facilitate observation, sampling, and measurement of the waste generated on the property of the Owner or Extender.

B. A Metering/Sampling Facility shall be installed on the Building Sewer of any Industrial Establishment that discharges to a Public Sewer.

C. Metering/Sampling Facilities shall be located in legally described easements, and shall be located as close to the public right-of-way as practicable with direct access provided from the public right-of-way.

D. Refer to the Standard Details for Metering/Sampling Facility requirements.

APPENDICES

APPENDIX 1

Sewer Testing Forms

LIST OF SEWER TESTING FORMS

Form Name	Form No.
Sewer Force Main Pressure Test Report	1
Gravity Sewer Test Report	2
Manhole Vacuum Test Report	3
Lateral Locations	4
Volumetric Wet Well Drawdown Test	5
Building Sewer Installation Report	6A
Sewer Lateral Installation Report	6B
Manhole Inspection Report	7

East Coventry Township

SEWER FORCE MAIN
PRESSURE TEST REPORT

Date: _____ Computed By: _____

Development: _____ Checked By: _____

Drawing No.: _____ Sheet No. _____ **of** _____

Contractor: _____ Project No. _____

Test Pressure: _____ Test Start: _____ Test Finish: _____

ALLOWABLE WATER LOSS

L = Leakage in Gallons (GPH) _____

S = Length of Pipe Tested In Feet _____

D = Diameter of Pipe in Inches _____

P = Test Pressure in PSI _____

NOTE: 7.48 Gallons/CU. FT.

Location:

_____

_____

_____

TEST DATA			
Time	Pressure	Loss or Depth	
			Start
			1/2 Hr. Reading
			Repressure
			1 Hr. Reading
			1 1/2 Hr. Reading
			Repressure
			2 Hr. Reading
			Repressure

CALCULATIONS

$$L = \frac{SD\sqrt{P}}{133{,}200}$$

Total Leakage for 2 Hour Period _____

Allowed Leakage for 2 Hour Period _____

Line Passes or Fails Test _____

FORM NO. 1

ARRO

East Coventry Township

Gravity Sewer Test Report

Development: _____ Drawing No.: _____ Sheet No. _____ **of** _____

Contractor: _____ Observed By: _____ Proj. No. _____

From MH No.	To MH No.	Length Tested (L.F.)	Max. Depth (feet)	Lamp Test Passed		Televised Date	Mandrel Test Pass Date	Pressure Test						Result
				Initial Test Date	Final Test Date			Date	Time		PSIG Start	PSIG End	PSIG Loss	
									Start	End				

FORM NO. 2

East Coventry Township

Manhole Vacuum Test Report

Development: _____ Drawing No.: _____ Sheet No. _____

Contractor: _____ Inspected By: _____ Proj. No. _____

Manhole	Date	Time		Vacuum (inches of Hg)			Result	
		Start	Stop	Start	Stop	Loss	Pass	Fail

FORM NO. 3

East Coventry Township

Lateral Locations

Development: _____ Proj. No. _____

Contractor: _____

Material: _____ Distance: _____ Slope: _____

Street Name: _____ In a Right-of-Way: _____

Lot	Depth	Length	Station	**Manhole No. ____**	Station	Length	Depth	Lot
				F L O W				
				Manhole No. ____				

Observer: _____ Drawing No.: _____

Prepared By: _____

FORM NO. 4

EAST COVENTRY TOWNSHIP
Volumetric Wet Well Drawdown Test

Development: _____ Project No.: _____

Contractor: _____ Date: _____

Name of Pump Station: _____ Computed By: _____

Type of Station:

Wet Well/Dry Well _____ Submersible _____ Suction Lift _____

Wet Well Dimensions (FT.):

Length: _____ Width: _____ Diameter: _____

Volume/Vertical Foot: _____ Cubic Feet

Volume/Vertical Foot: _____ Gallons

PUMP NO. _____

Test No. 1	**Test No. 2**	**Test No. 3**
Wet Well Level	**Wet Well Level**	**Wet Well Level**
Start _____	Start _____	Start _____
End _____	End _____	End _____
Volume _____	Volume _____	Volume _____
Time _____	Time _____	Time _____
Flow Rate (GPM) _____	**Flow Rate (GPM)** _____	**Flow Rate (GPM)** _____
Rated Pump Capacity (GPM) _____	**Rated Pump Capacity (GPM)** _____	**Rated Pump Capacity (GPM)** _____

BUILDING SEWER INSTALLATION REPORT

EAST COVENTRY TOWNSHIP
Chester County, PA

PART I – GENERAL INFORMATION		
Note: This report is to be completed for the connection of a new Building Sewer to an existing Lateral.		
Owner Name (person or entity that will own the property upon completion of Building Sewer installation):		
Street Address of Improved Property for which Building Sewer is being installed:		
Development Name (if applicable):	Lot Number (if applicable):	
Contractor:	Date:	
PART II – INSTALLATION		
Note: Refer to Section 6 and Standard Details in the Technical Specifications for complete requirements.		
Size and Material of Building Sewer:		
Distance from Exterior Wall of Structure to Vent Centerline (10' Max.), ft.:		
Vent and Cleanout in Place?	☐ Yes	☐ No
Slope of Building Sewer at Least ¼"/ft?	☐ Yes	☐ No
8" Min. of 2B Stone Under Building Sewer?	☐ Yes	☐ No
16" Min. of 2B Stone Above Building Sewer?	☐ Yes	☐ No
Overall Compliance with Standard Details?	☐ Yes	☐ No
PART III – TESTING		
Note: Refer to Section 6.2.F of the Technical Specifications for specific testing requirements.		
Test Material:	☐ Air	☐ Water
Test Pressure:	_____ psi	(Minimum residual pressure of 5.0 psi must be maintained for 15 minutes without introduction of additional air or water)
Start Time:		Stop Time:
Test Result:	☐ Pass	☐ Fail
PART IV – OVERALL INSPECTION RESULT		
☐ **Pass**	☐ **Fail**	

Observed By (Signature): _____

(Printed Name):

Township Building Code Official

FORM NO. 6A

SEWER LATERAL INSTALLATION REPORT

EAST COVENTRY TOWNSHIP
Chester County, PA

PART I – GENERAL INFORMATION		
Note: This report is to be completed for the connection of a new sanitary sewer Lateral to an existing sanitary sewer main.		
Owner Name (person or entity that will own the property upon completion of Lateral installation):		
Street Address of Improved Property for which Lateral is being installed:		
Contractor:	Date:	
PART II – INSTALLATION		
Note: Refer to Section 6 and Standard Details in the Technical Specifications for complete requirements.		
Size and Material of Lateral:		
Type of Connection to Existing Sewer Main:		
Length of Lateral:		
Slope of Lateral at Least ¼"/ft?	☐ Yes	☐ No
8" Min. of 2B Stone Under Lateral?	☐ Yes	☐ No
16" Min. of 2B Stone Above Lateral?	☐ Yes	☐ No
PART III – TESTING		
Note: Per Section 6.2.G of the Technical Specifications, in the case of a new Lateral tying into an existing gravity sewer main, the Lateral shall be tested concurrently with the Building Sewer. Refer to Section 6.2.F of the Technical Specifications for specific testing requirements.		
Test Material:	☐ Air	☐ Water
Test Pressure:	_____ psi	(Minimum residual pressure of 5.0 psi must be maintained for 15 minutes without introduction of additional air or water)
Start Time:		Stop Time:
Test Result:	☐ Pass	☐ Fail
PART IV – OVERALL INSPECTION RESULT		
☐ **Pass**		☐ **Fail**

Observed By (Signature): _____

(Printed Name):

ARRO Consulting, Inc. – Office of the Township Engineer

FORM NO. 6B

EAST COVENTRY TOWNSHIP
Manhole Inspection Report

Project Name: _____ Date: _____

Project Number: _____ RPR: _____

Manhole Number: _____ Dwg. No.: _____

Contractor: _____

Cover As Specified: ☐ No ☐ Yes

If Other: _____

Watertight: ☐ No ☐ Yes

Gasket: ☐ No ☐ Yes

Insert: ☐ No ☐ Yes

Frame: Seal w/ Butyl Rubber ☐ No ☐ Yes ☐ Can't See

Frame: Coated ☐ No ☐ Yes Type of Coating: _____

Anchor Bolts: Stainless Steel ☐ No ☐ Yes Number: _____ ☐ Can't See

Concrete Donuts: ☐ No ☐ Yes Number / Thickness: _____

Steps / Rungs: Straight: ☐ No ☐ Yes 12" Spacing: ☐ No ☐ Yes

Top Step / Rung Within 24": ☐ No ☐ Yes

Bottom Step / Rung Within 12": ☐ No ☐ Yes

Precast Joints: Excess Butyl Rubber: ☐ No ☐ Yes

Channel Conditions: Smooth: ☐ No ☐ Yes

Clean: ☐ No ☐ Yes

Shape Specified: ☐ No ☐ Yes

Bench Conditions: Slope: ☐ No ☐ Yes

Smooth: ☐ No ☐ Yes

Clean: ☐ No ☐ Yes

Special Coatings: Epoxy: Cone/Slab: ☐ No ☐ Yes Walls: ☐ No ☐ Yes

Bench/Channel: ☐ No ☐ Yes

Plastic Lined: Cone/Slab: ☐ No ☐ Yes Walls: ☐ No ☐ Yes

Bench/Channel: ☐ No ☐ Yes

Drop Manhole: ☐ No ☐ Yes Depth: _____

☐ Inside ☐ Outside

Pipes Grouted: ☐ No ☐ Yes

Vacuum Test: ☐ No ☐ Yes Date: _____

Inspection: ☐ Preliminary ☐ Final If Final: ☐ Pass ☐ Fail

Comments:

APPENDIX 2

Standard Details

LIST OF STANDARD DETAILS

Detail Name	Detail No.
Precast Manhole Detail	1
Standard Manhole Frame & Cover	2
Precast Manhole w/ Force Main Discharge	3
Standard Casing Cradle	4
Manhole Details – Drop Connection	5
Trench Restoration – Existing Roads	6A
Trench Restoration – New Roads	6B
Trench Restoration – Lawn/Agricultural Areas	6C
Air Release Valve Vault (Force Main Only)	7
Valve & Cleanout Manhole	8
Horizontal & Vertical Up Restraint Thrust Block Detail – Elbows	9
Horizontal Restraint Thrust Block Detail – Tees	10
Vertical Down Restraint Thrust Block Detail – Elbows	11
Simplex Grinder Pump Detail – Plumbing	12
Typical Stream Crossing	13
Concrete Encasement	14
Force Main Cleanout for Manhole Type 1	15
Force Main Cleanout for Manhole Type 2	16
Building Sewer & Lateral Through Foundation	17A
Building Sewer & Lateral Under Foundation	17B
Building Sewer & Lateral Detail Notes	17C
New Cleanout in Paved Area	18
New Cleanout & Vent in Paved Area	19
Metering/Sampling Facility Site Plan	20A
Metering/Sampling Facility Sectional Plan	20B
Metering/Sampling Facility Sections	20C
Vertical Riser Lateral Connection	21
Trench Plug Detail	22
Typical Protection Post	23

NOTES:

1. ADJUST TO GRADE WITH CONCRETE GRADE RINGS (MAXIMUM VERTICAL ADJUSTMENT 6"). SEE FRAME & COVER DETAILS.
2. MECHANICALLY VIBRATED PRECAST CONCRETE SHALL CONFORM TO A.S.T.M. SPEC. C-478.
3. FOR MANHOLES WHERE TOP OF RIM TO INVERT DISTANCE IS LESS THAN 5'-0", USE FLAT TOP MANHOLE IN LIEU OF CONE TOP.
4. FILL ALL LIFTING HOLES WITH NON-SHRINK GROUT.
5. PROVIDE 2 RINGS OF PREFORMED BUTYL RUBBER SEALING COMPOUND (INSIDE & OUTSIDE) AT ALL MANHOLE JOINTS.
6. COAT INTERIOR & EXTERIOR WITH NSF APPROVED EPOXY, 20-MIL DFT (TYP.)
   INTERIOR COLOR: WHITE
   EXTERIOR COLOR: BEIGE

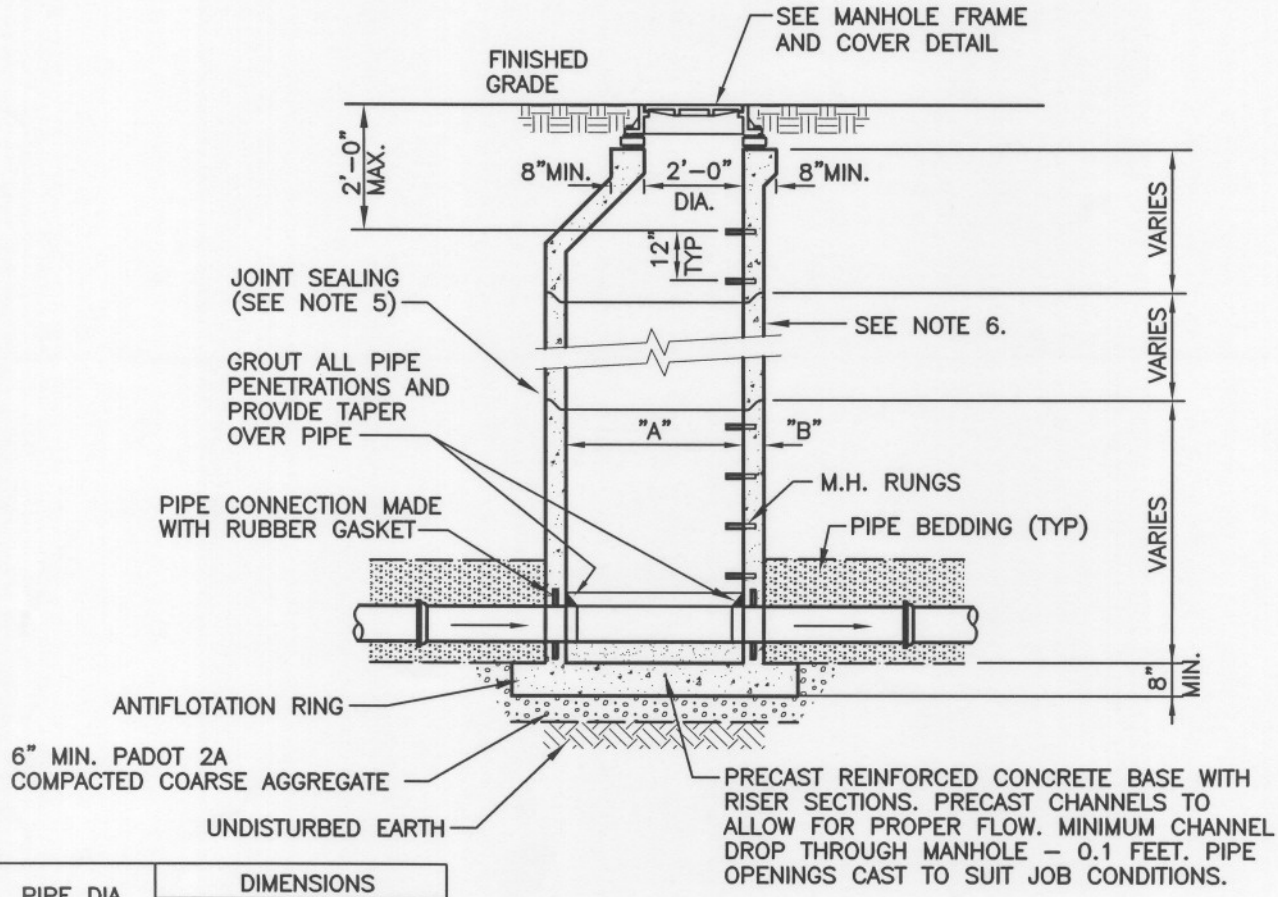

PIPE DIA.	DIMENSIONS	
	"A"	"B" (MIN.)
8"-15"	4'-0"	5"
18"-21"	5'-0"	6"
24"-36"	6'-0"	7"

SECTION

1	2/9/04
REVISION	DATE

EAST COVENTRY TOWNSHIP

STANDARD DETAIL - SEWER SYSTEM

PRECAST MANHOLE DETAIL

ARRO Consulting, Inc.
Suite 100, 649 North Lewis Road
Limerick, Pennsylvania 19468
Tel 610.495.0303

DATE: JUNE 2002

DETAIL: 1

DWG. NAME 5222SD01

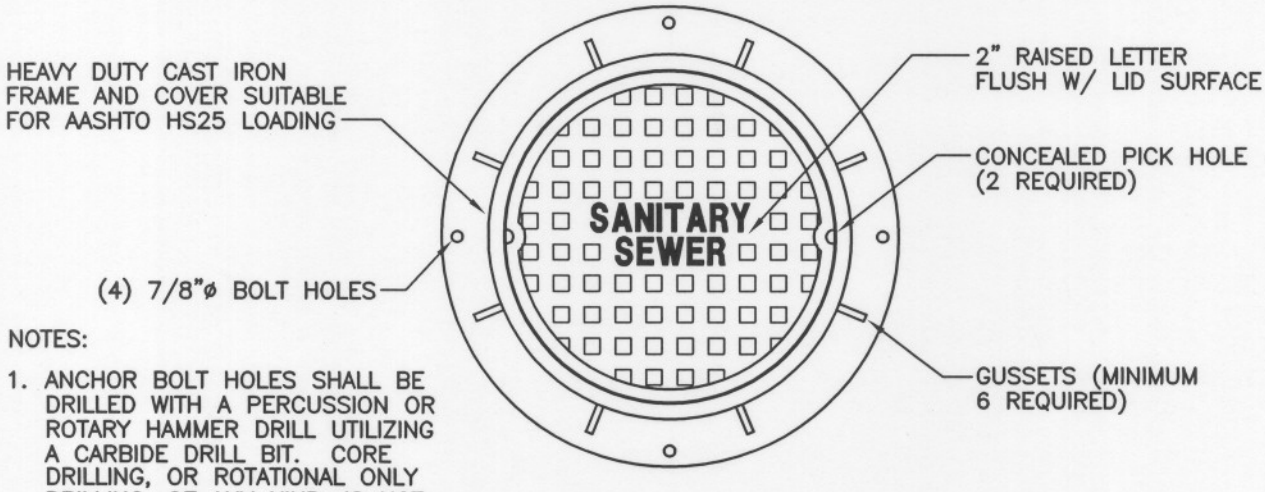

NOTES:

1. ANCHOR BOLT HOLES SHALL BE DRILLED WITH A PERCUSSION OR ROTARY HAMMER DRILL UTILIZING A CARBIDE DRILL BIT. CORE DRILLING, OR ROTATIONAL ONLY DRILLING, OF ANY KIND, IS NOT ALLOWED.
2. FRAME ANCHORS SHALL BE TIGHTENED PRIOR TO CURING OF NON-SHRINK GROUT.

PLAN – COVER PATTERN

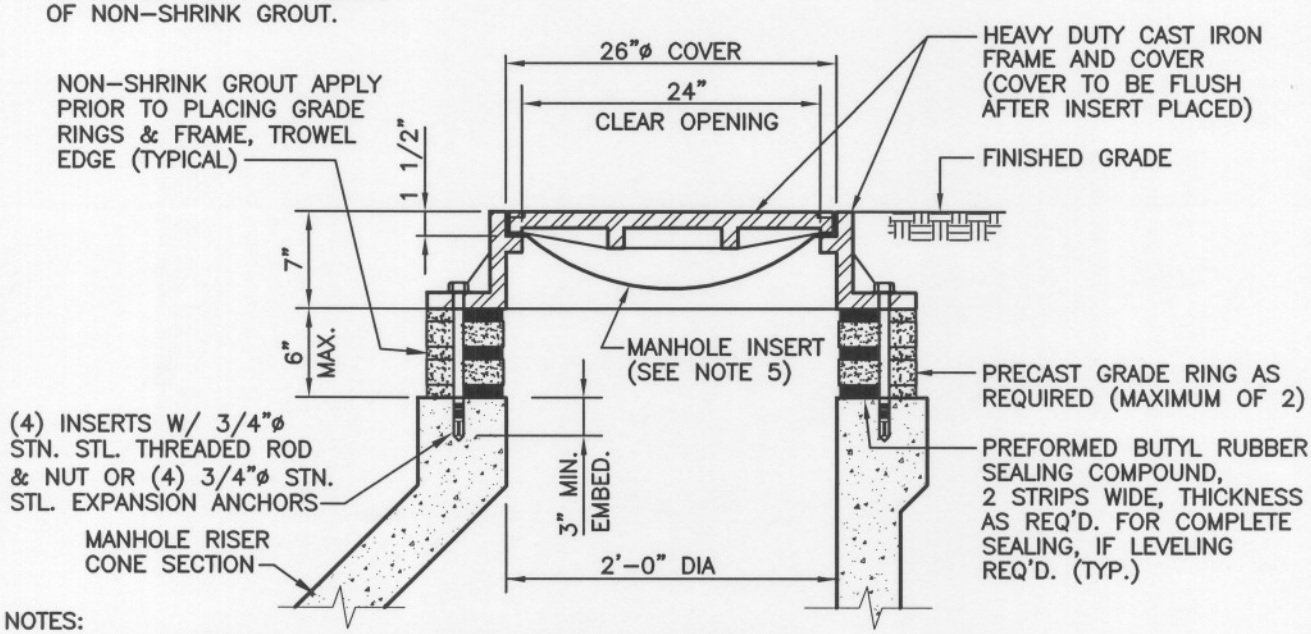

NOTES:

1. STANDARD MH FRAME & COVER SHALL BE CAT. NO. 1040 AS MANUFACTURED BY EAST JORDAN IRON WORKS, INC.
2. WATERTIGHT FRAME & COVER SHALL BE CAT. NO. 1040 "WATERTITE" AS MANUFACTURED BY EAST JORDAN IRON WORKS, INC.
3. MANHOLE INSERT NOT REQUIRED FOR WATERTIGHT MH. FRAME & COVER.
4. FRAME & COVER SHALL BE DESIGNED FOR AASHTO HS-25 LOADING.
5. MANHOLE INSERTS REQ'D. FOR ALL STANDARD FRAMES & COVERS. FRAME SHALL BE SPECIALLY MACHINED TO ACCOMODATE INSERT SO THAT TOP OF COVER IS EVEN WITH TOP OF FRAME WHEN INSERT IS INSTALLED.

REVISION	DATE
2	9/21/06
1	2/9/04

EAST COVENTRY TOWNSHIP

STANDARD DETAIL - SEWER SYSTEM

STANDARD MANHOLE FRAME & COVER

ARRO Consulting, Inc.
Suite 100, 649 North Lewis Road
Limerick, Pennsylvania 19468
Tel 610.495.0303

DATE: JUNE 2002

DETAIL: 2

DW. NAME 5222SD02

NOTES:

1. ADJUST TO GRADE WITH CONC. GRADE RINGS (MAX. VERT. ADJUST. 6"). SEE FRAME & COVER DETAIL.
2. MECHANICALLY VIBRATED PRECAST CONC. SHALL CONFORM TO A.S.T.M. C-478.
3. SEAL ALL JOINTS INSIDE & OUTSIDE WITH PREFORMED BUTYL RUBBER SEALING COMPOUND.
4. FILL ALL LIFTING HOLES WITH NON-SHRINK GROUT.
5. INTERIOR PLASTIC LINER TO PROVIDE CONTINUOUS, IMPERMEABLE LINING TO SHIELD PRECAST CONC. AGAINST DETERIORATION CAUSED BY CORROSIVE ATMOSPHERE.

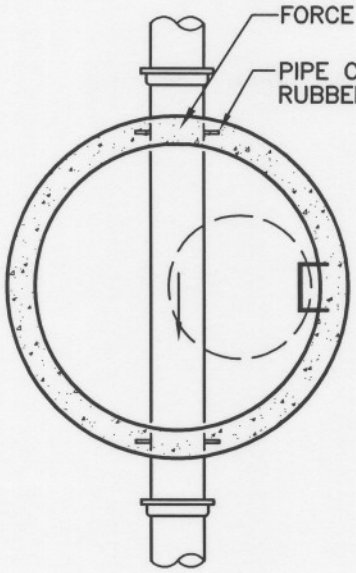

PLAN

NOTES: (CONT'D)

6. INSIDE DIAMETER DETERMINED BY PIPE SIZE & CONFIGURATION IN MANHOLE. SEE PRECAST MANHOLE DETAIL.
7. CHANNELS, BENCH AND ALL PENETRATIONS THROUGH LINER SHALL RECEIVE FACTORY APPLIED CORROSION RESISTANT COATING.
8. INTERIOR LINER SHALL BE AGRU SURE GRIP LINER & GU-BASE LINER AS MANUFACTURED BY TERRE HILL CONCRETE PRODUCTS.

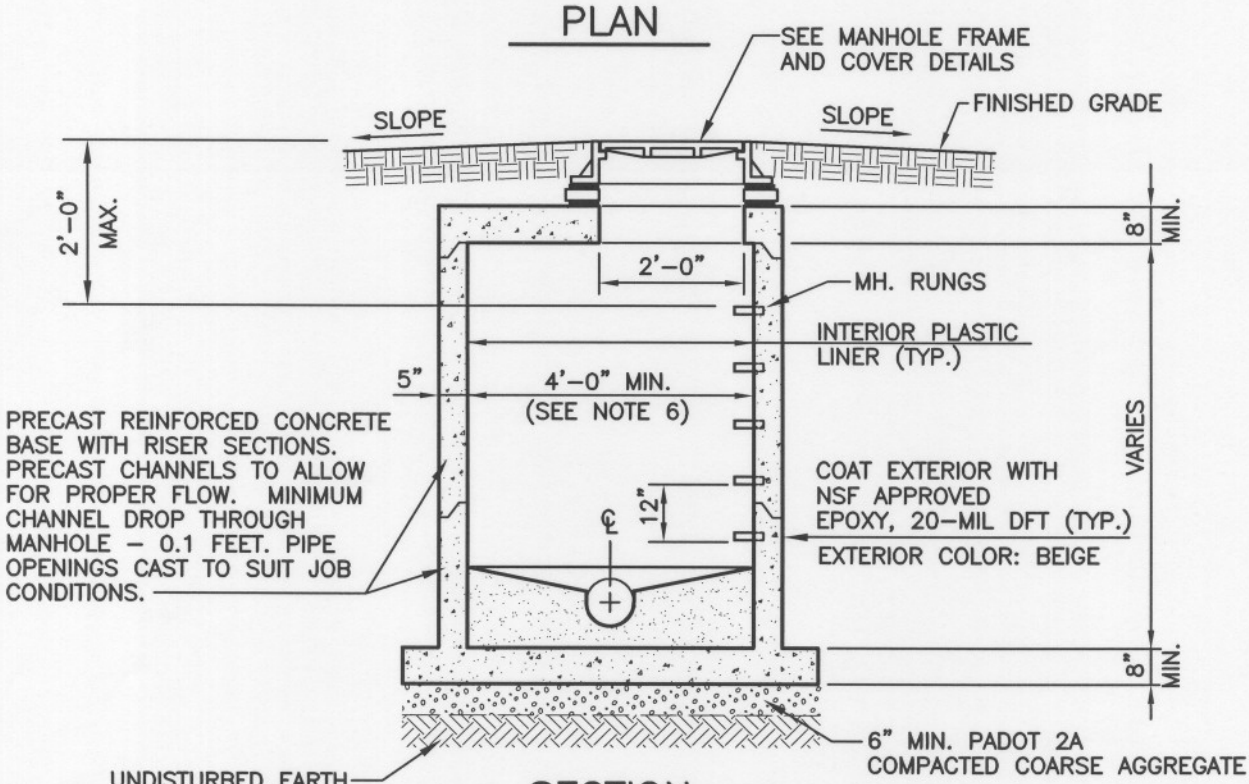

SECTION

1	2/9/04
REVISION	DATE

EAST COVENTRY TOWNSHIP

STANDARD DETAIL - SEWER SYSTEM

PRECAST MANHOLE W/ FORCE MAIN DISCHARGE

ARRO Consulting, Inc.
Suite 100, 649 North Lewis Road
Limerick, Pennsylvania 19468
Tel 610.495.0303

DATE: JUNE 2002

DETAIL: 3

DWG. NAME 5222SD03

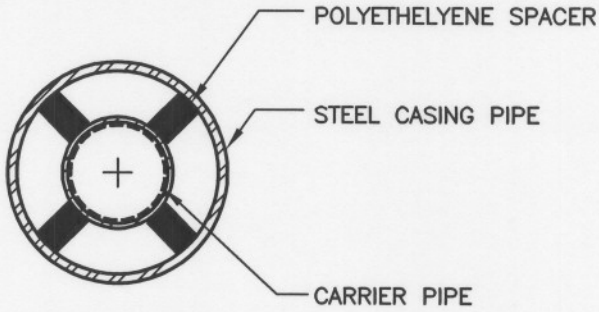

SECTION

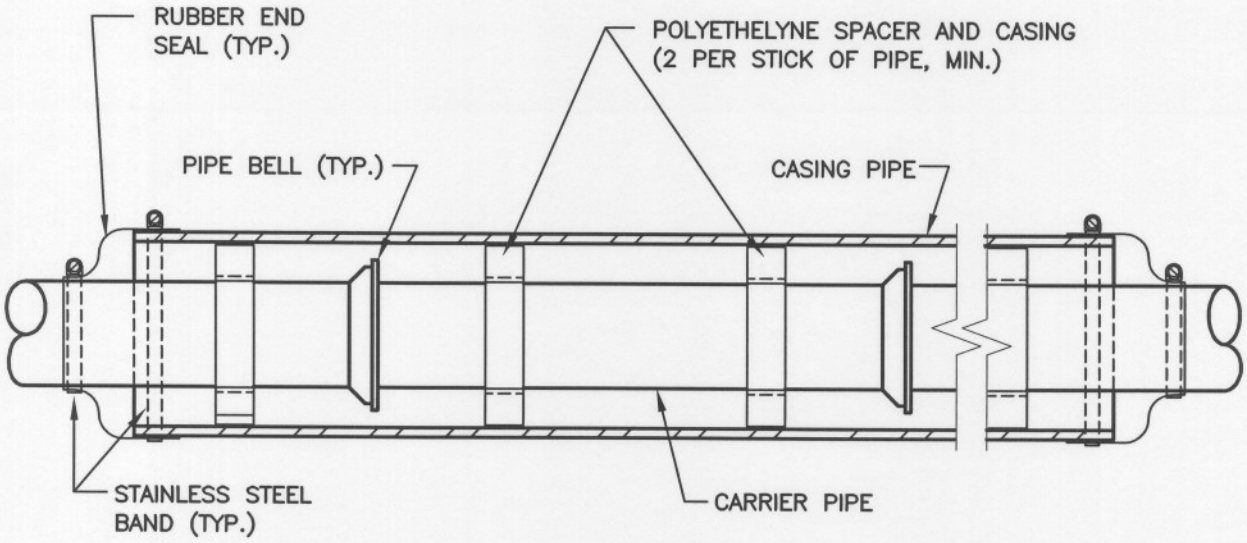

ELEVATION

		EAST COVENTRY TOWNSHIP	ARRO Consulting, Inc.
		STANDARD DETAIL - SEWER SYSTEM	Suite 100, 649 North Lewis Road Limerick, Pennsylvania 19468 Tel 610.495.0303
1	2/9/04	**STANDARD CASING CRADLE**	DATE: JUNE 2002
REVISION	DATE		DETAIL: 4

DWG. NAME 5222SD04

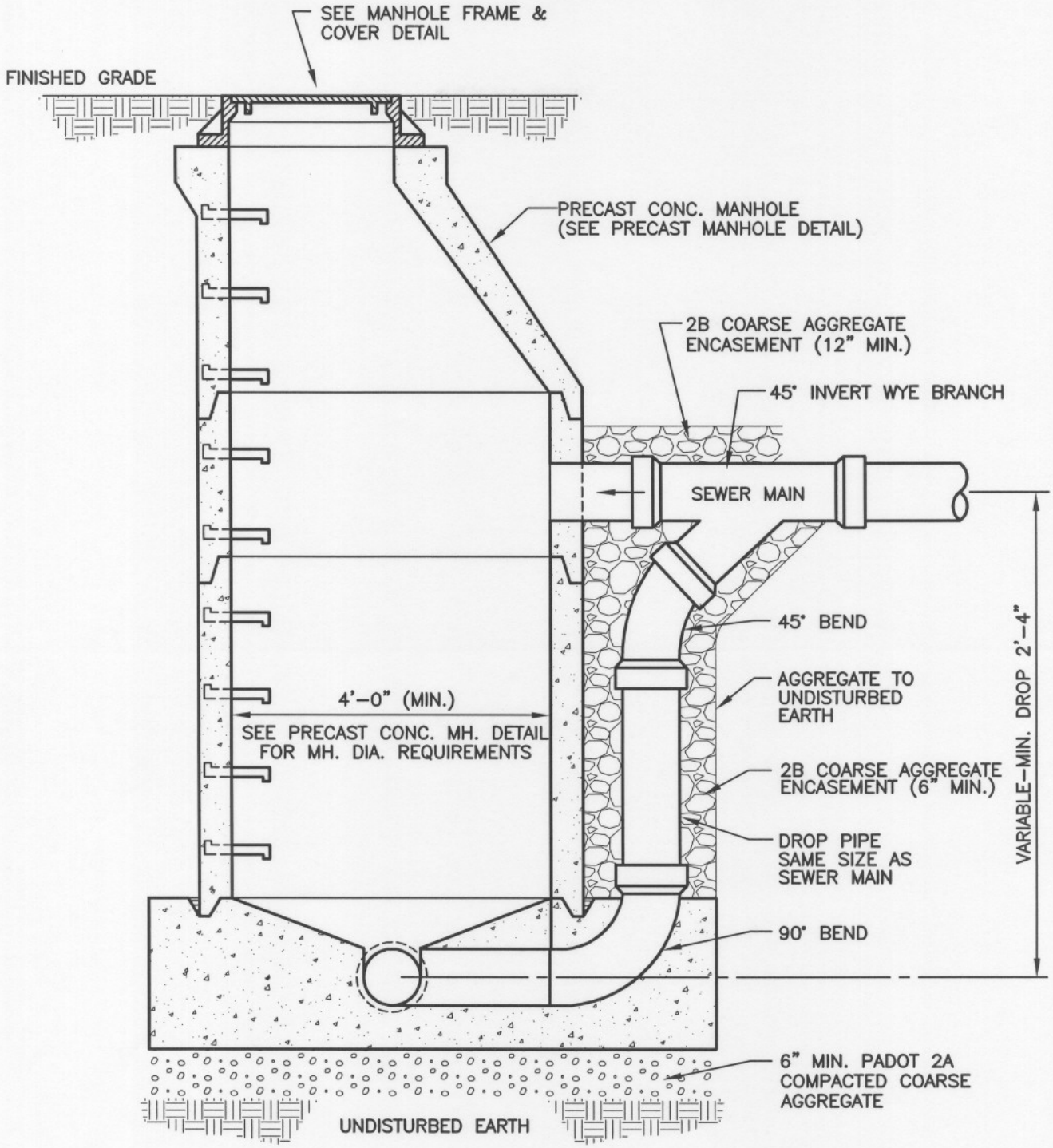

2	9/21/06
1	2/9/04
REVISION	DATE

EAST COVENTRY TOWNSHIP

STANDARD DETAIL - SEWER SYSTEM

MANHOLE DETAILS DROP CONNECTION

ARRO
ARRO Consulting, Inc.
Suite 100, 649 North Lewis Road
Limerick, Pennsylvania 19468
Tel 610.495.0303

DATE: JUNE 2002

DETAIL: 5

DWG. NAME 5222SD05

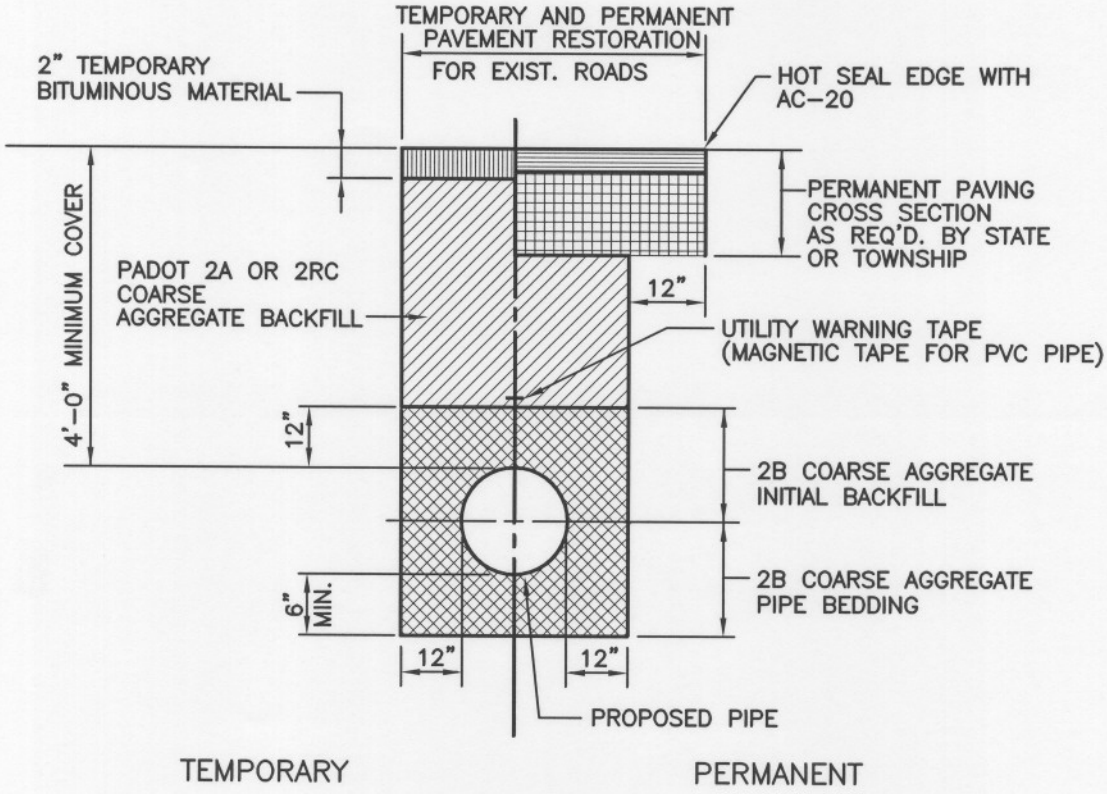

(TYPICAL FOR EXISTING STATE HIGHWAYS, TOWNSHIP ROADS, SHOULDERS & DRIVEWAYS)

NOTE: IF THERE IS A CONFLICT BETWEEN STATE ROAD RESTORATION REQUIREMENTS AND THIS DETAIL, THE STATE ROAD RESTORATION REQUIREMENTS SHALL PREVAIL.

		EAST COVENTRY TOWNSHIP	ARRO Consulting, Inc.
		STANDARD DETAIL	Suite 100, 649 North Lewis Road Limerick, Pennsylvania 19468 Tel 610.495.0303
1	2/9/04	**TRENCH RESTORATION EXISTING ROADS**	DATE: JUNE 2002
REVISION	DATE		DETAIL: 6A

DWG. NAME 5222SD06A

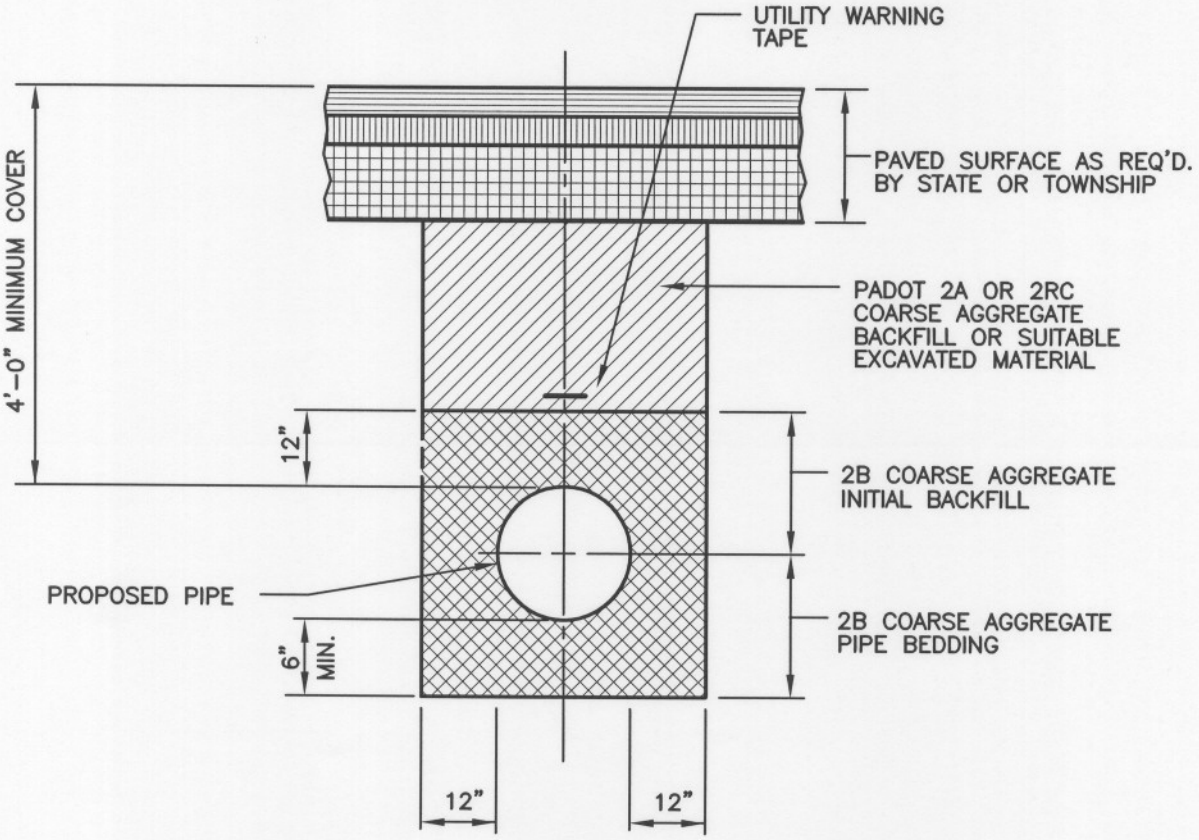

1	2/9/04
REVISION	DATE

EAST COVENTRY TOWNSHIP

STANDARD DETAIL

TRENCH RESTORATION NEW ROADS

ARRO
ARRO Consulting, Inc.
Suite 100, 649 North Lewis Road
Limerick, Pennsylvania 19468
Tel 610.495.0303

DATE: JUNE 2002

DETAIL: 6B

DWG. NAME 5222SD06B

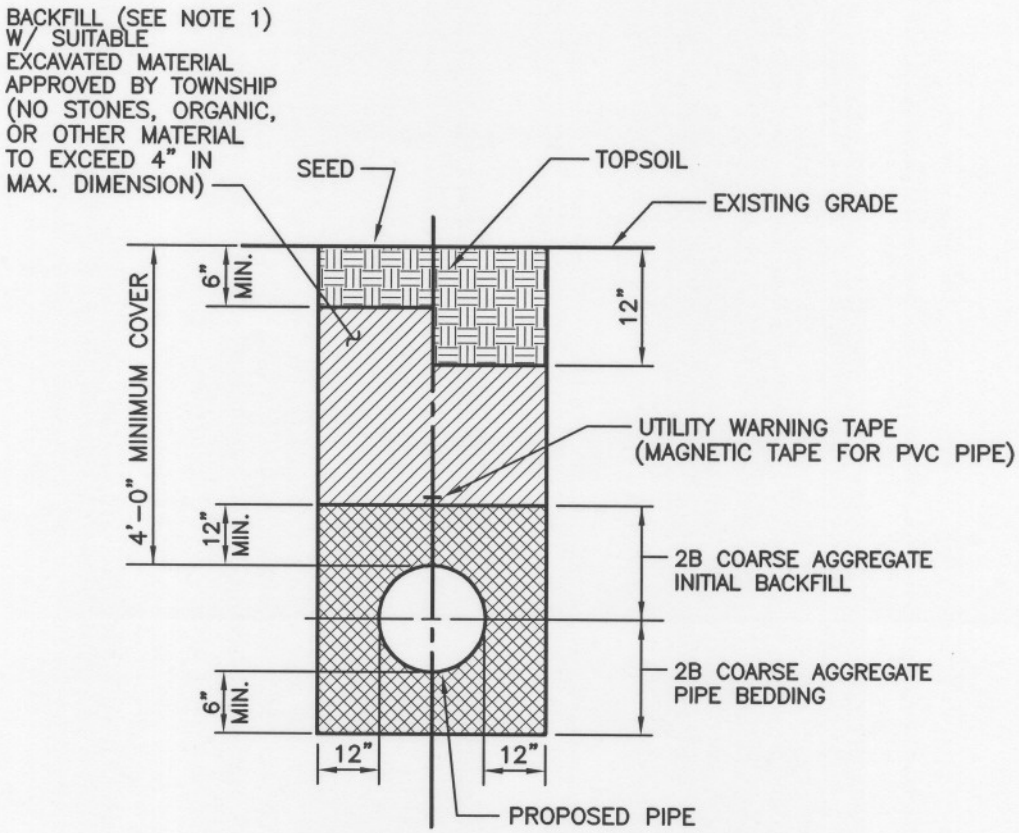

NOTE:

1. IF EDGE OF TRENCH IS LESS THAN 3' OFF THE EDGE OF PAVING OF A STATE ROAD, THEN BACKFILL MATERIAL SHALL BE PADOT 2A OR 2RC.

		EAST COVENTRY TOWNSHIP	ARRO Consulting, Inc.
		STANDARD DETAIL	Suite 100, 649 North Lewis Road Limerick, Pennsylvania 19468 Tel 610.495.0303
1	2/9/04	**TRENCH RESTORATION LAWN/AGRICULTURAL AREAS**	DATE: JUNE 2002
REVISION	DATE		DETAIL: 6C

DWG. NAME 5222SD06C

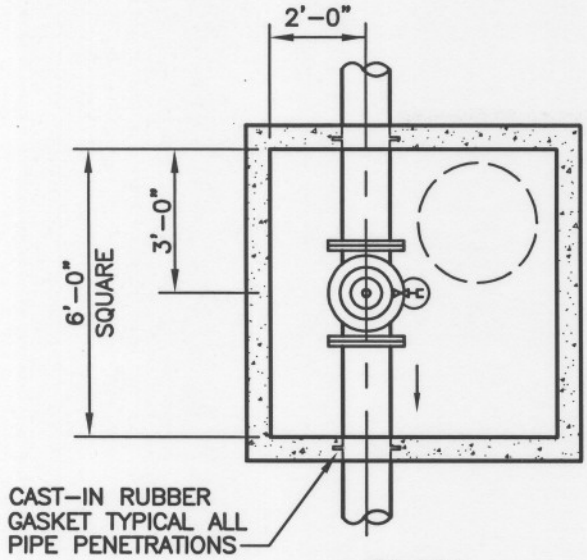

PLAN

NOTES:

1. ADJUST TO GRADE WITH CONCRETE GRADE RINGS (MAXIMUM VERTICAL ADJUSTMENT 6"). SEE FRAME & COVER DETAIL.
2. MECHANICALLY VIBRATED PRECAST CONCRETE SHALL CONFORM TO A.S.T.M. SPEC. C-478.
3. PROVIDE 2 RINGS OF PREFORMED BUTYL RUBBER SEALING COMPOUND (INSIDE & OUTSIDE) AT ALL MANHOLE JOINTS.
4. FILL ALL LIFTING HOLES WITH NON-SHRINK GROUT.
5. COAT INTERIOR & EXTERIOR WITH NSF APPROVED EPOXY, 20-MIL DFT (TYP.)
   INTERIOR COLOR: WHITE
   EXTERIOR COLOR: BEIGE

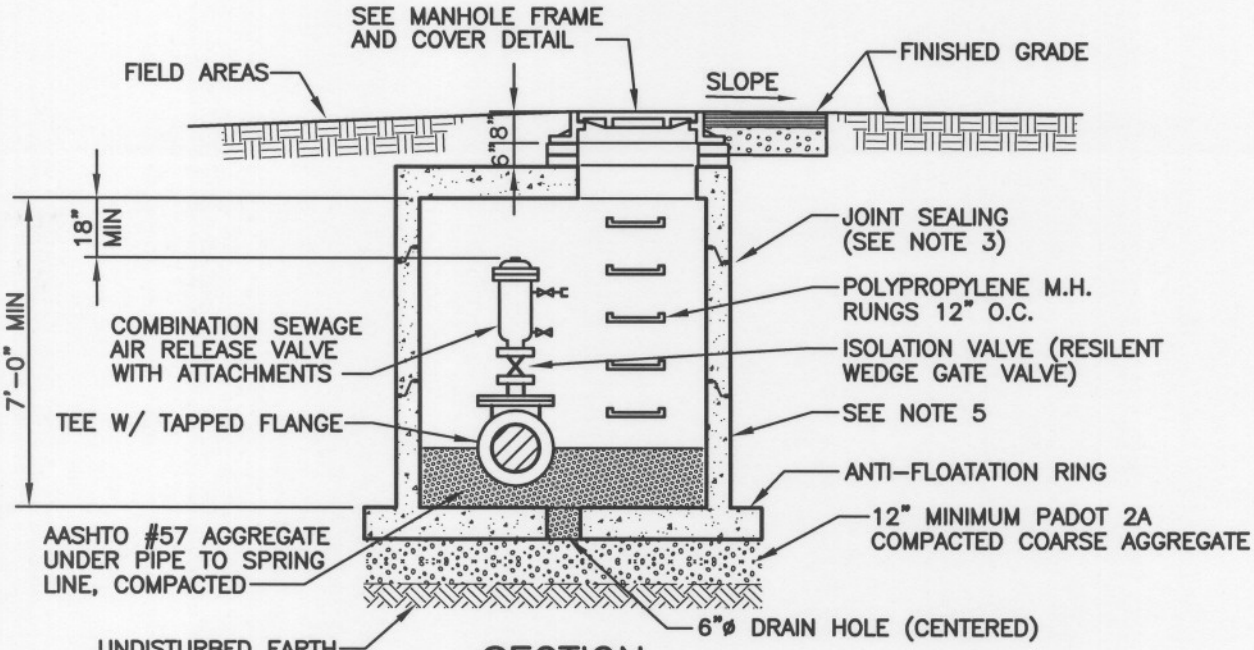

SECTION

SPECIAL NOTE: DEPTH OF MAIN MUST BE INCREASED FROM THE 4'-0" STANDARD TO ALLOW FOR INSTALLATION OF THE AIR RELEASE VALVE WITH 18 INCH MINIMUM CLEARANCE. THE PIPE SHALL BE CONTINUOUSLY RISING WITH THE AIR RELEASE VALVE AT THE HIGHEST ELEVATION POINT IN THE PIPING.

		EAST COVENTRY TOWNSHIP	ARRO Consulting, Inc.
		STANDARD DETAIL - SEWER SYSTEM	Suite 100, 649 North Lewis Road Limerick, Pennsylvania 19468 Tel 610.495.0303
1	2/9/04	**AIR RELEASE VALVE VAULT (FORCE MAIN ONLY)**	DATE: JUNE 2002
REVISION	DATE		DETAIL: 7

DWG. NAME 5222SD07

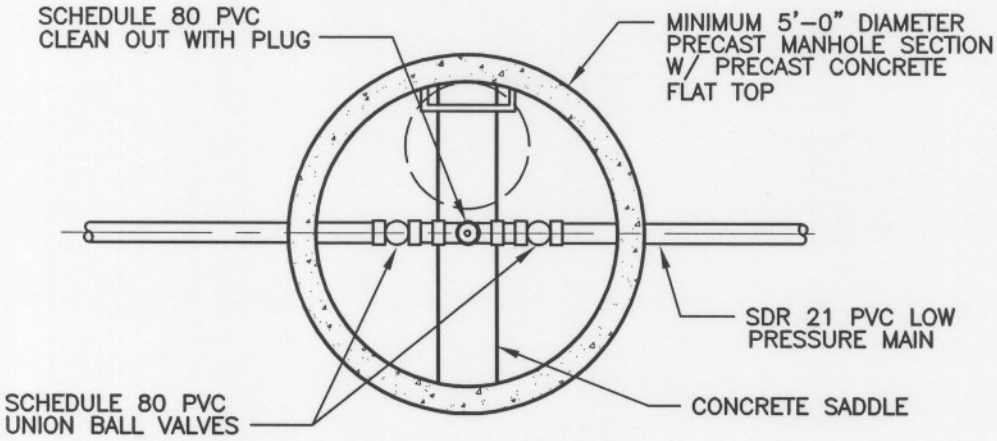

PLAN

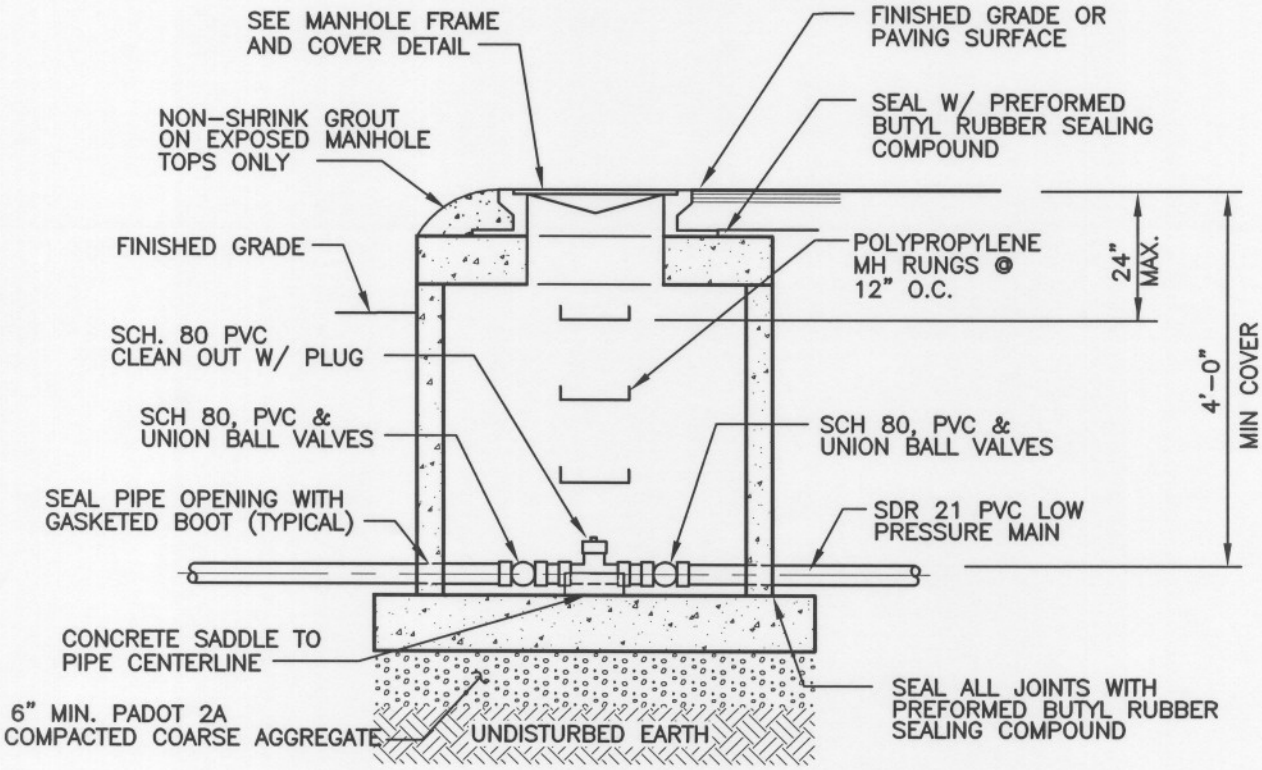

SECTION

NOTE:

ALL PIPE AND FITTINGS BETWEEN VALVES SHALL BE SCHEDULE 80 PVC

		EAST COVENTRY TOWNSHIP	ARRO Consulting, Inc.
		STANDARD DETAIL - SEWER SYSTEM	Suite 100, 649 North Lewis Road Limerick, Pennsylvania 19468 Tel 610.495.0303
1	2/9/04	**VALVE & CLEANOUT MANHOLE**	DATE: JUNE 2002
REVISION	DATE		DETAIL: 8

DWG. NAME 5222SD08

THRUST BLOCK DIMENSION SCHEDULE – ELBOWS(*)					
PIPE DIAM.	DIM.	ELBOW DEFLECTION ANGLE			
		11 1/4°	22 1/2°	45°	90°
1 1/2" THRU 4"	A	12"	18"	24"	24"
	B	12"	12"	12"	18"
6"	A	18"	24"	30"	42"
	B	12"	18"	24"	30"
8"	A	24"	24"	42"	60"
	B	12"	24"	30"	36"
12"	A	30"	42"	54"	90"
	B	24"	30"	36"	48"

(*) THRUST BLOCK DESIGN BASED ON THE MINIMUM SOIL HORIZONTAL BEARING STRENGTH OF 3000 PSF AND 150 PSI WORKING PRESSURE PLUS 50% WATER HAMMER ALLOWANCE.

FOR PIPE SIZES GREATER THAN 12", SUBMIT ENGINEERING CALCULATIONS TO VERIFY PROPOSED THRUST BLOCK SIZES.

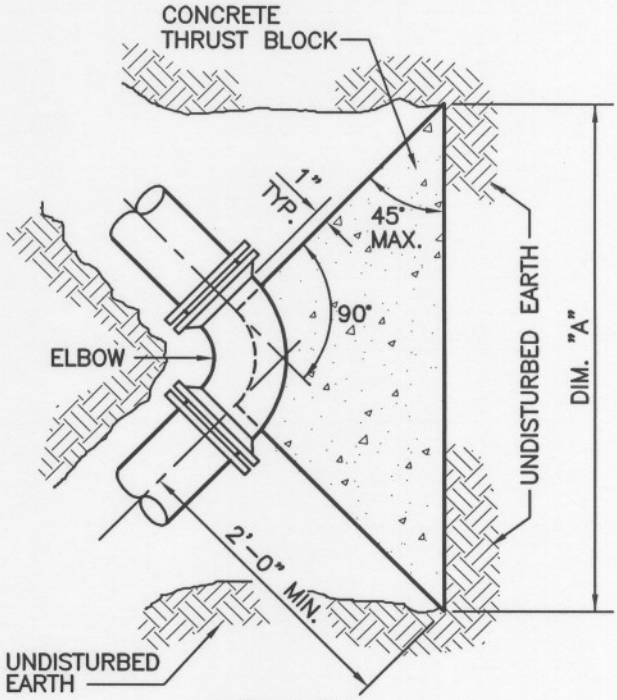

PLAN

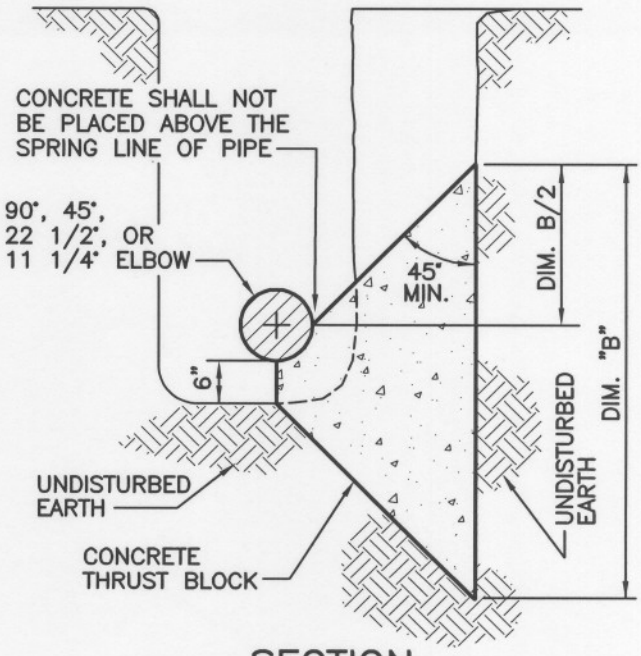

SECTION

REVISION	DATE
2	9/21/06
1	2/9/04

EAST COVENTRY TOWNSHIP

STANDARD DETAIL - SEWER SYSTEM

HORIZ. & VERT. UP RESTRAINT THRUST BLOCK DETAIL-ELBOWS

ARRO
ARRO Consulting, Inc.
Suite 100, 649 North Lewis Road
Limerick, Pennsylvania 19468
Tel 610.495.0303

DATE: JUNE 2002

DETAIL: 9

DWG. NAME 5222SD09

THRUST BLOCK DIMENSION SCHEDULE – ELBOWS(*)				
DIM.	BRANCH SIZE			
	1 1/2" – 4"	6"	8"	12"
A	36"	42"	60"	96"
B	18"	24"	30"	42"

(*) THRUST BLOCK DESIGN BASED ON THE MINIMUM SOIL HORIZONTAL BEARING STRENGTH OF 3000 PSF AND 150 PSI WORKING PRESSURE PLUS 50% WATER HAMMER ALLOWANCE.

FOR PIPE SIZES GREATER THAN 12", SUBMIT ENGINEERING CALCULATIONS TO VERIFY PROPOSED THRUST BLOCK SIZES.

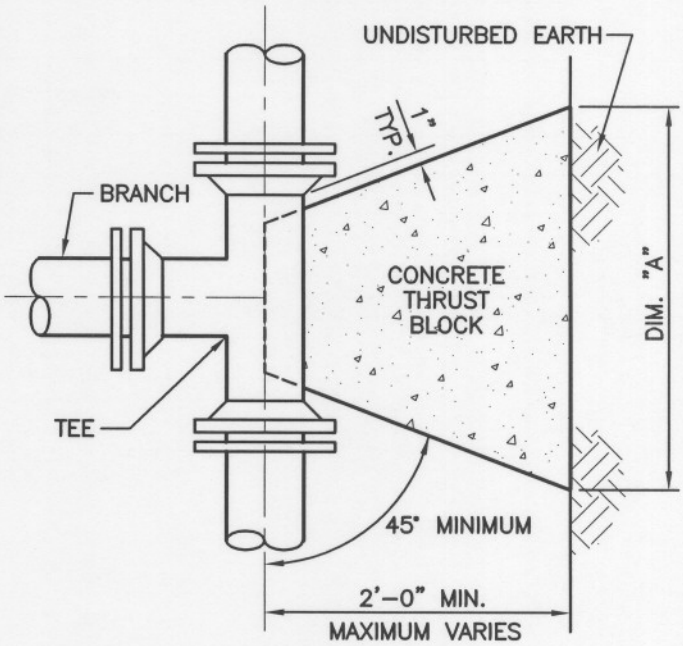

PLAN

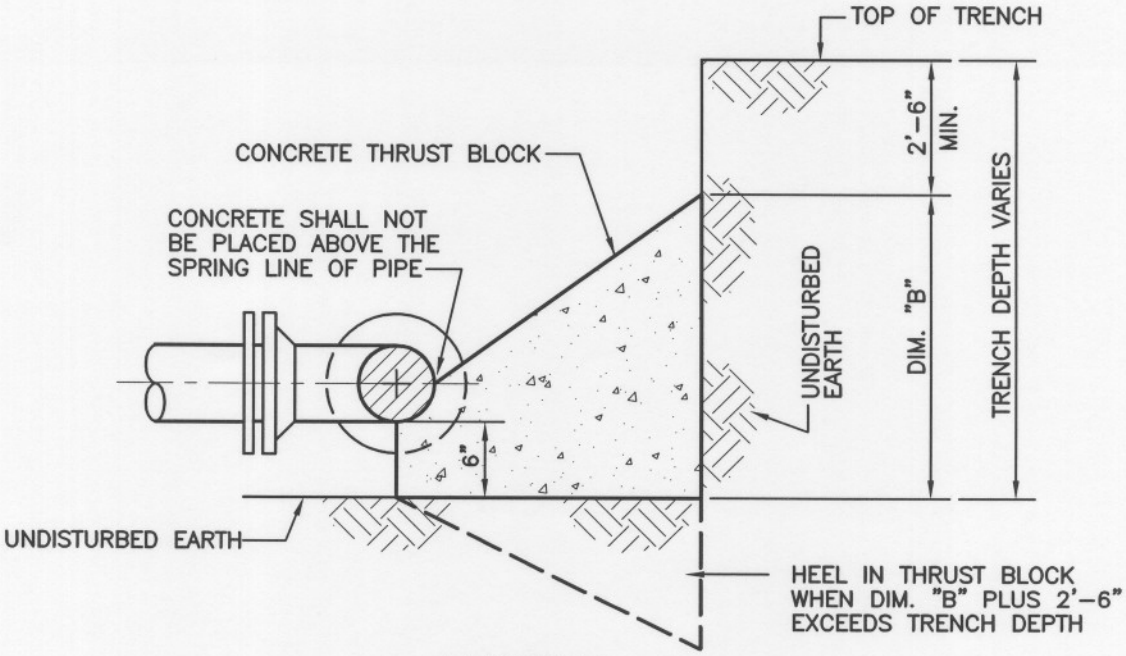

SECTION

REVISION	DATE
1	2/9/04

EAST COVENTRY TOWNSHIP

STANDARD DETAIL - SEWER SYSTEM

HORIZONTAL RESTRAINT THRUST BLOCK DETAIL-TEES

ARRO Consulting, Inc.
Suite 100, 649 North Lewis Road
Limerick, Pennsylvania 19468
Tel 610.495.0303

DATE: JUNE 2002

DETAIL: 10

DWG. NAME 5222SD10

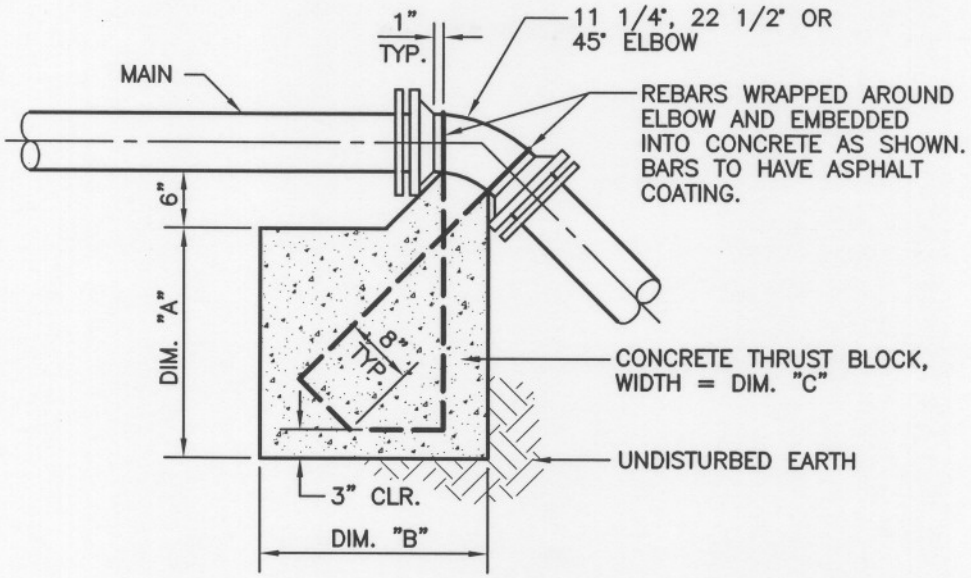

SECTION

THRUST BLOCK DIMENSION SCHEDULE – VERTICAL ELBOWS(*) (DUCTILE IRON PIPE)									
DIM.	1 1/2" – 6" 11 1/4°	8" 11 1/4°	12" 11 1/4°	1 1/2" – 6" 22 1/2°	8" 22 1/2°	12" 22 1/2°	1 1/2" – 6" 45°	8" 45°	12" 45°
A	12"	18"	36"	18"	36"	54"	36"	48"	54"
B	18"	24"	36"	24"	36"	48"	36"	48"	54"
C	18"	24"	24"	24"	24"	30"	24"	30"	48"
REBAR	#4	#4	#6	#4	#4	#6	#4	#4	#6

(*) THRUST BLOCK DESIGN BASED ON THE MINIMUM SOIL HORIZONTAL BEARING STRENGTH OF 3000 PSF AND 150 PSI WORKING PRESSURE PLUS 50% WATER HAMMER ALLOWANCE.

FOR PIPE SIZES GREATER THAN 12", SUBMIT ENGINEERING CALCULATIONS TO VERIFY PROPOSED THRUST BLOCK SIZES.

REVISION	DATE
1	2/9/04

EAST COVENTRY TOWNSHIP

STANDARD DETAIL - SEWER SYSTEM

VERTICAL DOWN RESTRAINT THRUST BLOCK DETAIL-ELBOWS

ARRO Consulting, Inc.
Suite 100, 649 North Lewis Road
Limerick, Pennsylvania 19468
Tel 610.495.0303

DATE: JUNE 2002

DETAIL: 11

DWG. NAME 5222SD11

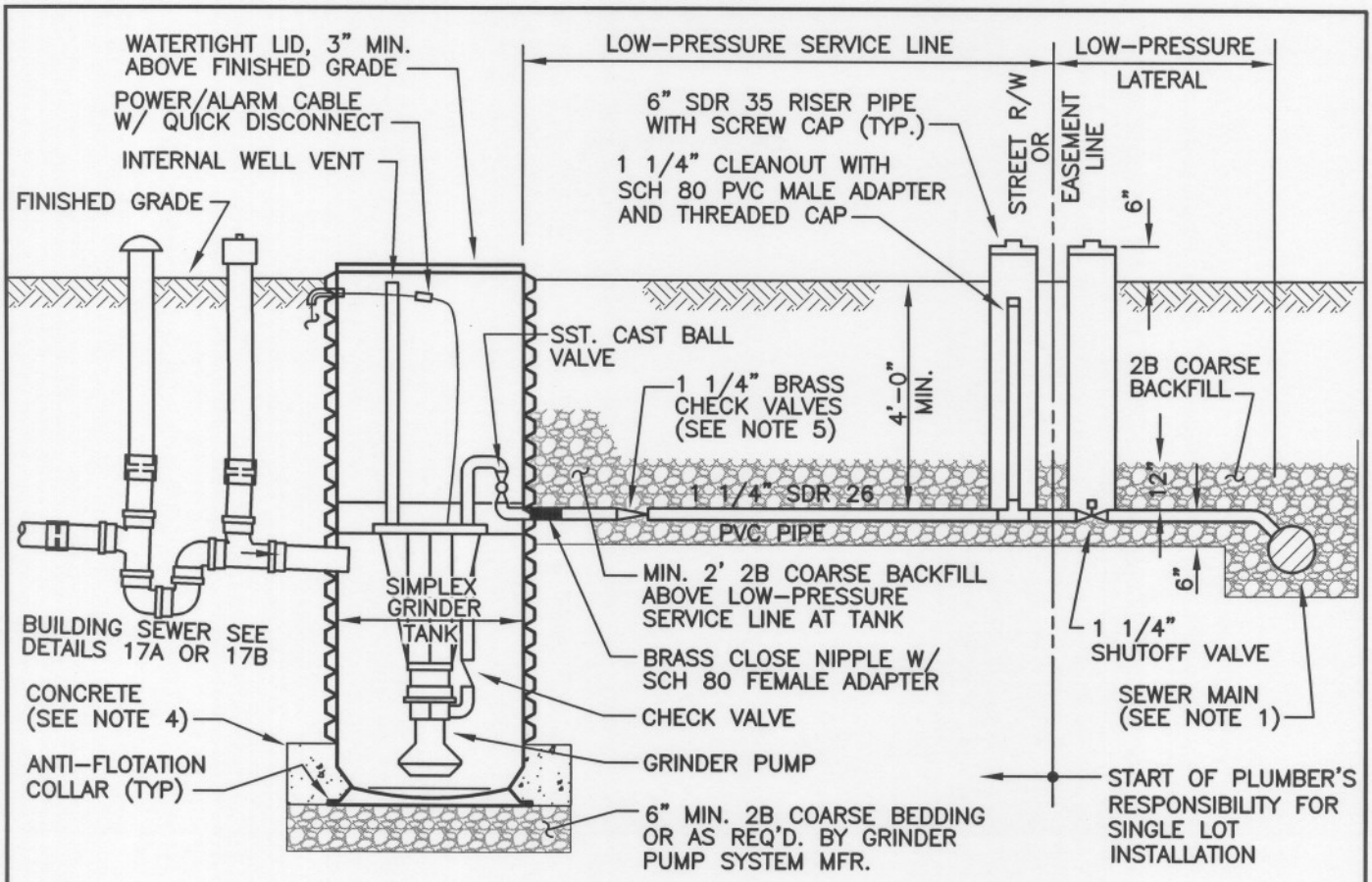

NOTES:

1. MANHOLE CONNECTIONS – LOW-PRESSURE LATERAL SHALL PENETRATE MANHOLE (SEAL WATERTIGHT) AND TURN DOWN (90°) TO THE MANHOLE BENCH. THE BENCH SHALL BE MODIFIED WITH A FLOW CHANNEL TO ACCOMMODATE THE PRESSURE DISCHARGE IN THE DIRECTION OF FLOW.

   GRAVITY MAIN CONNECTIONS – LOW-PRESSURE LATERAL SHALL BE ROLLED (45°) AND CONNECT WITH A WYE (OR SADDLE IF GRAVITY MAIN IS EXISTING) USING APPROPRIATE REDUCERS AND ADAPTERS TO CREATE A SMOOTH DISCHARGE INTO THE DIRECTION OF FLOW.

   LOW-PRESSURE SEWER CONNECTIONS – LOW-PRESSURE LATERAL SHALL BE ROLLED (45°) AND CONNECTED TO THE LOW-PRESSURE SEWER WITH A WYE AND APPROPRIATE ADAPTERS TO ENSURE A SMOOTH DISCHARGE INTO THE DIRECTION OF FLOW.

   ALL CONNECTIONS ARE SUBJECT TO ENGINEERS APPROVAL. CONNECTIONS TO HIGH-PRESSURE FORCE MAINS SHALL NOT BE PERMITTED.

2. FOR PUBLIC LOW-PRESSURE SYSTEM INSTALLATION, CONTRACTOR'S RESPONSIBILITY ENDS AT RIGHT-OF-WAY OR EASEMENT LINE.

3. METALLIC DETECTION TAPE SHALL BE PLACED ABOVE LOW-PRESSURE SERVICE LINE AND LATERAL MAX. 2' BELOW FINISHED GRADE.

4. CONCRETE ANCHOR AS REQUIRED BY GRINDER PUMP SYSTEM MFR.

5. PROVIDE TWO (2) CHECK VALVES IN SERIES BETWEEN GRINDER PUMP & CLEANOUT WHEN DISCHARGING TO A LOW-PRESSURE SEWER MAIN.

REVISION	DATE
2	9/21/06
1	2/9/04

EAST COVENTRY TOWNSHIP

STANDARD DETAIL - SEWER SYSTEM

SIMPLEX GRINDER PUMP DETAIL-PLUMBING

ARRO Consulting, Inc.
Suite 100, 649 North Lewis Road
Limerick, Pennsylvania 19468
Tel 610.495.0303

DATE: JUNE 2002

DETAIL: 12

DWG. NAME 5222SD12

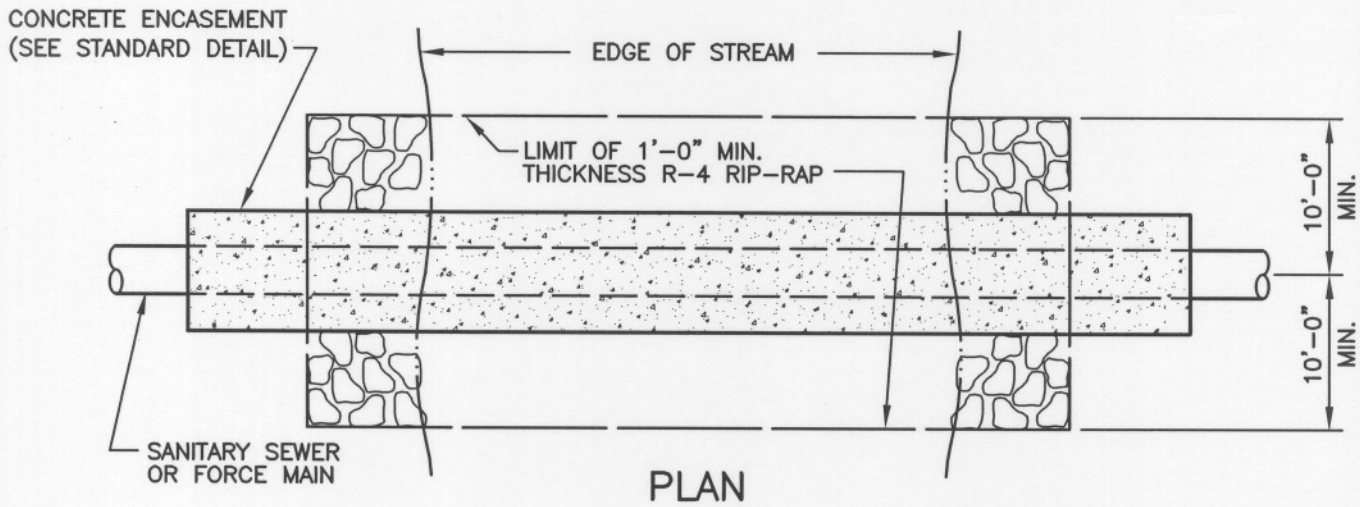

PLAN

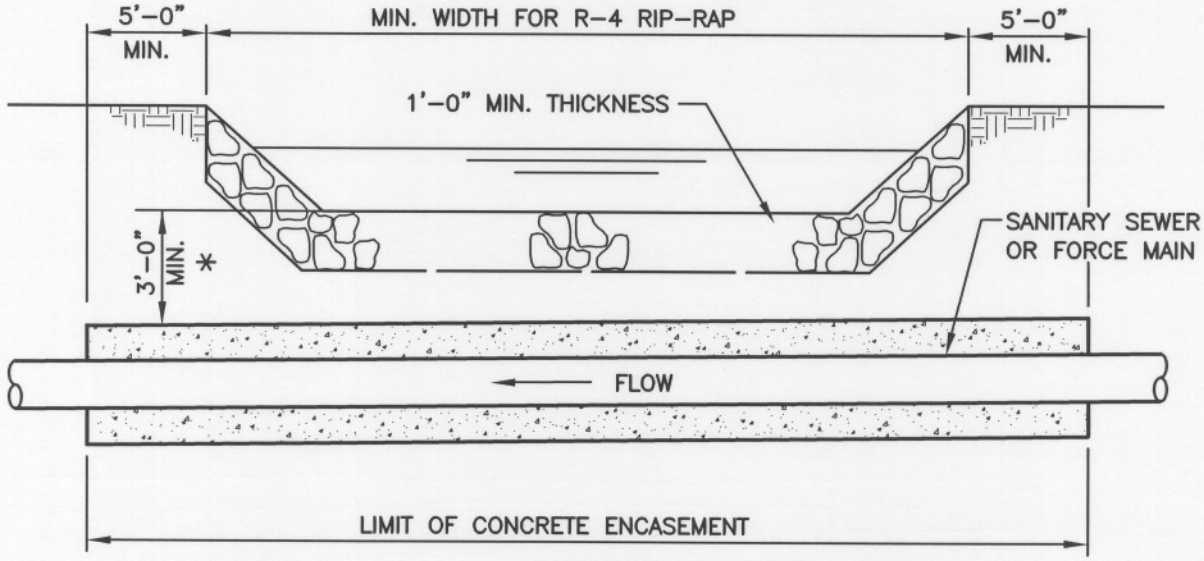

SECTION

NOTES:

ALL STREAM CROSSINGS SHALL BE IN STRICT ACCORDANCE WITH THE REQUIREMENTS OF THE CHESTER COUNTY CONSERVATION DISTRICT.

* 1'-0" MIN. IN ROCK.

		EAST COVENTRY TOWNSHIP	ARRO Consulting, Inc.
		STANDARD DETAIL - SEWER SYSTEM	Suite 100, 649 North Lewis Road Limerick, Pennsylvania 19468 Tel 610.495.0303
1	2/9/04	**TYPICAL STREAM CROSSING**	DATE: JUNE 2002
REVISION	DATE		DETAIL: 13

DWG. NAME 5222SD13

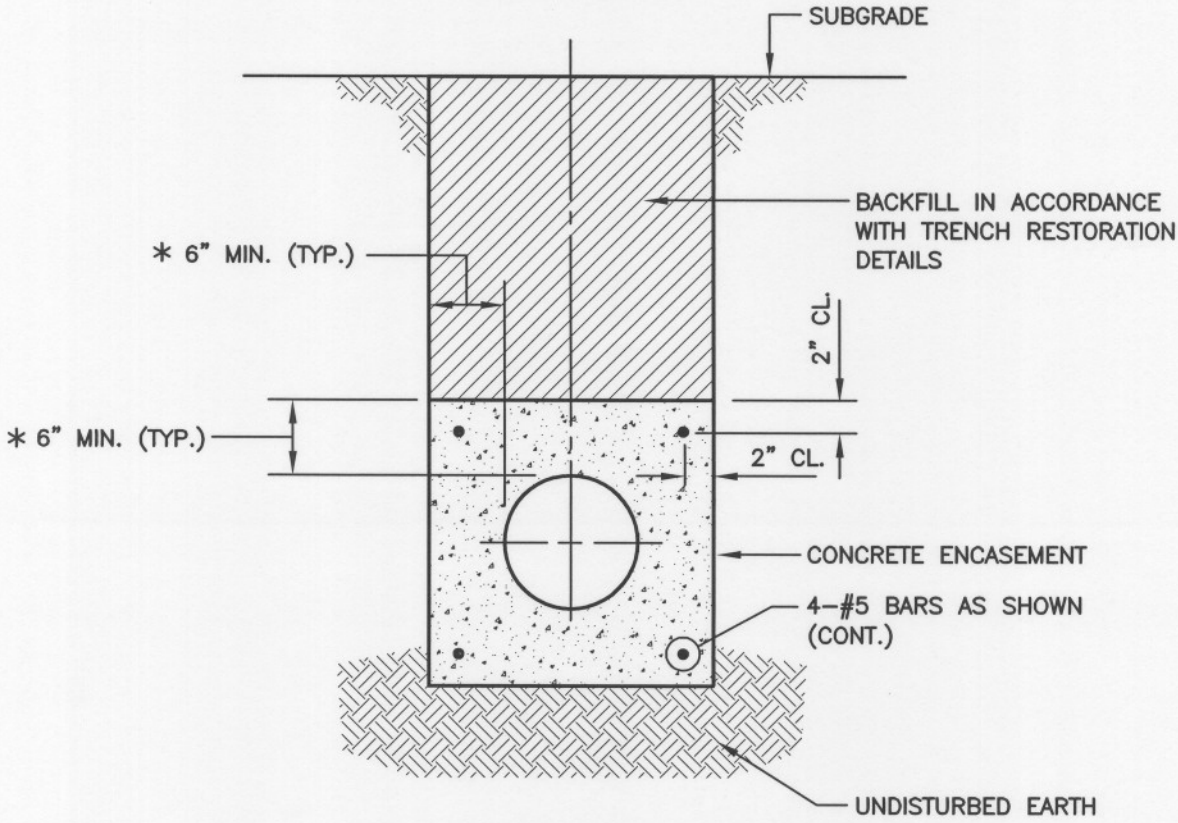

* 6" MINIMUM THICKNESS FOR PIPES UP TO 24 INCHES DIAMETER.
9" MINIMUM THICKNESS FOR PIPES 24 INCHES DIAMETER AND GREATER.

		EAST COVENTRY TOWNSHIP	ARRO Consulting, Inc.
		STANDARD DETAIL - SEWER SYSTEM	Suite 100, 649 North Lewis Road Limerick, Pennsylvania 19468 Tel 610.495.0303
1	2/9/04	**CONCRETE ENCASEMENT**	DATE: JUNE 2002
REVISION	DATE		DETAIL: 14

DWG. NAME 5222SD14

NOTES:

1. ADJUST TO GRADE WITH CONC. GRADE RINGS (MAX. VERT. ADJUST. 6"). SEE FRAME & COVER DETAIL.
2. MECHANICALLY VIBRATED PRECAST CONC. SHALL CONFORM TO A.S.T.M. C-478.
3. SEAL ALL JOINTS INSIDE & OUTSIDE WITH PREFORMED BUTYL RUBBER SEALING COMPOUND.

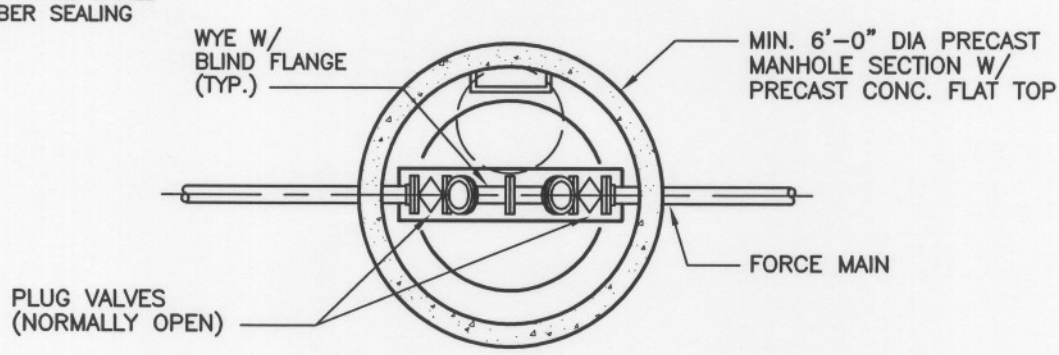

PLAN

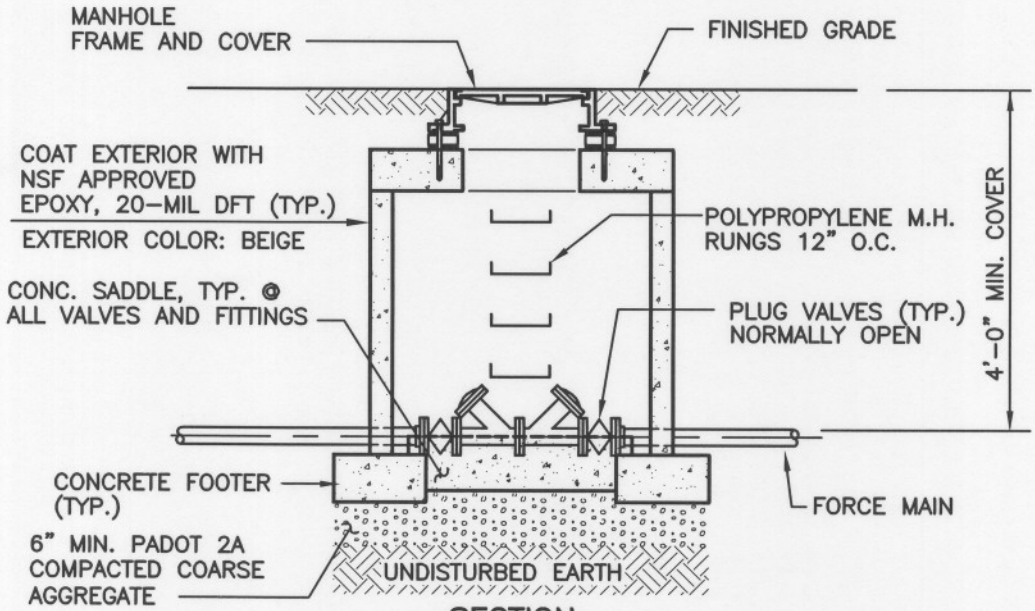

SECTION

		EAST COVENTRY TOWNSHIP	ARRO Consulting, Inc.
		STANDARD DETAIL - SEWER SYSTEM	Suite 100, 649 North Lewis Road Limerick, Pennsylvania 19468 Tel 610.495.0303
1	2/9/04	**FORCE MAIN CLEANOUT FOR MANHOLE TYPE 1**	DATE: JUNE 2002
REVISION	DATE		DETAIL: 15

DWG. NAME 5222SD15

NOTES:

1. ADJUST TO GRADE WITH CONC. GRADE RINGS (MAX. VERT. ADJUST. 6"). SEE FRAME & COVER DETAIL.
2. MECHANICALLY VIBRATED PRECAST CONC. SHALL CONFORM TO A.S.T.M. C-478.
3. SEAL ALL JOINTS INSIDE & OUTSIDE WITH PREFORMED BUTYL RUBBER SEALING COMPOUND.

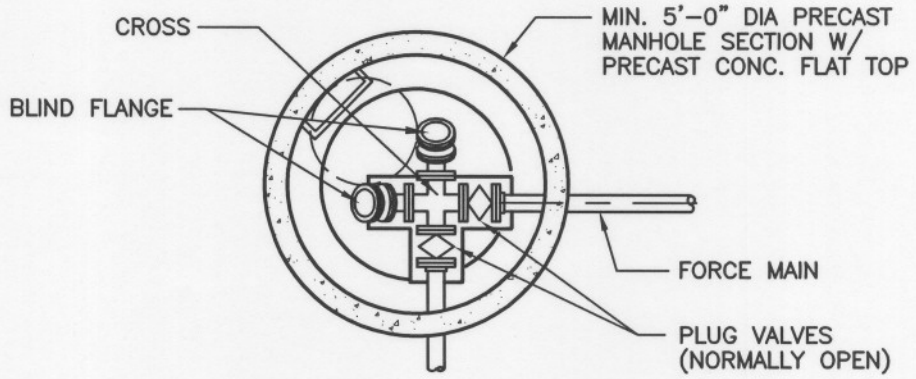

PLAN

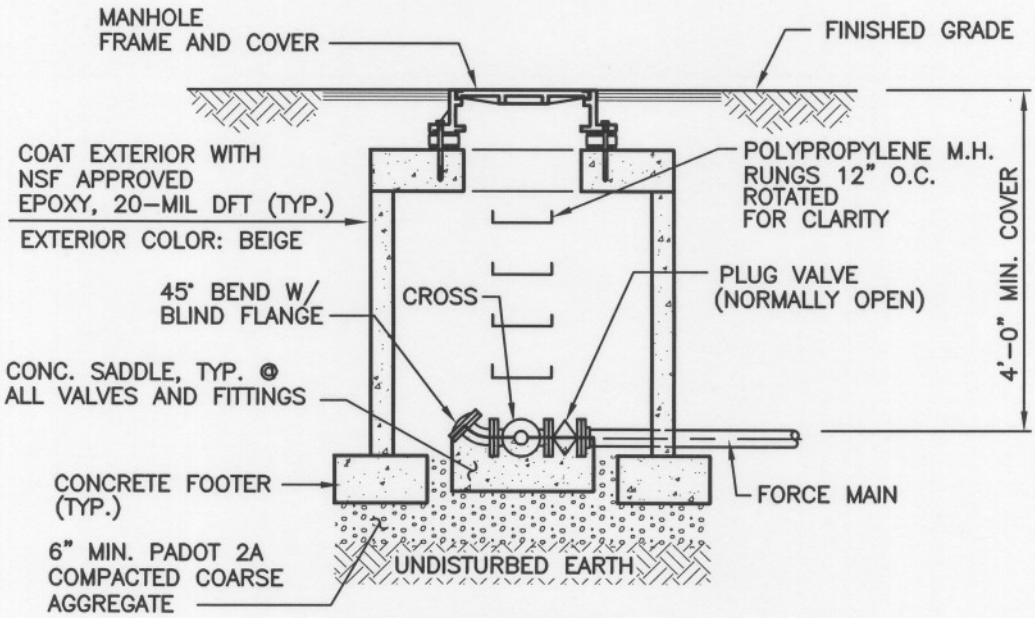

SECTION

1	2/9/04
REVISION	DATE

EAST COVENTRY TOWNSHIP

STANDARD DETAIL - SEWER SYSTEM

FORCE MAIN CLEANOUT FOR MANHOLE TYPE 2

ARRO Consulting, Inc.
Suite 100, 649 North Lewis Road
Limerick, Pennsylvania 19468
Tel 610.495.0303

DATE: JUNE 2002

DETAIL: 16

DWG. NAME 5222SD16

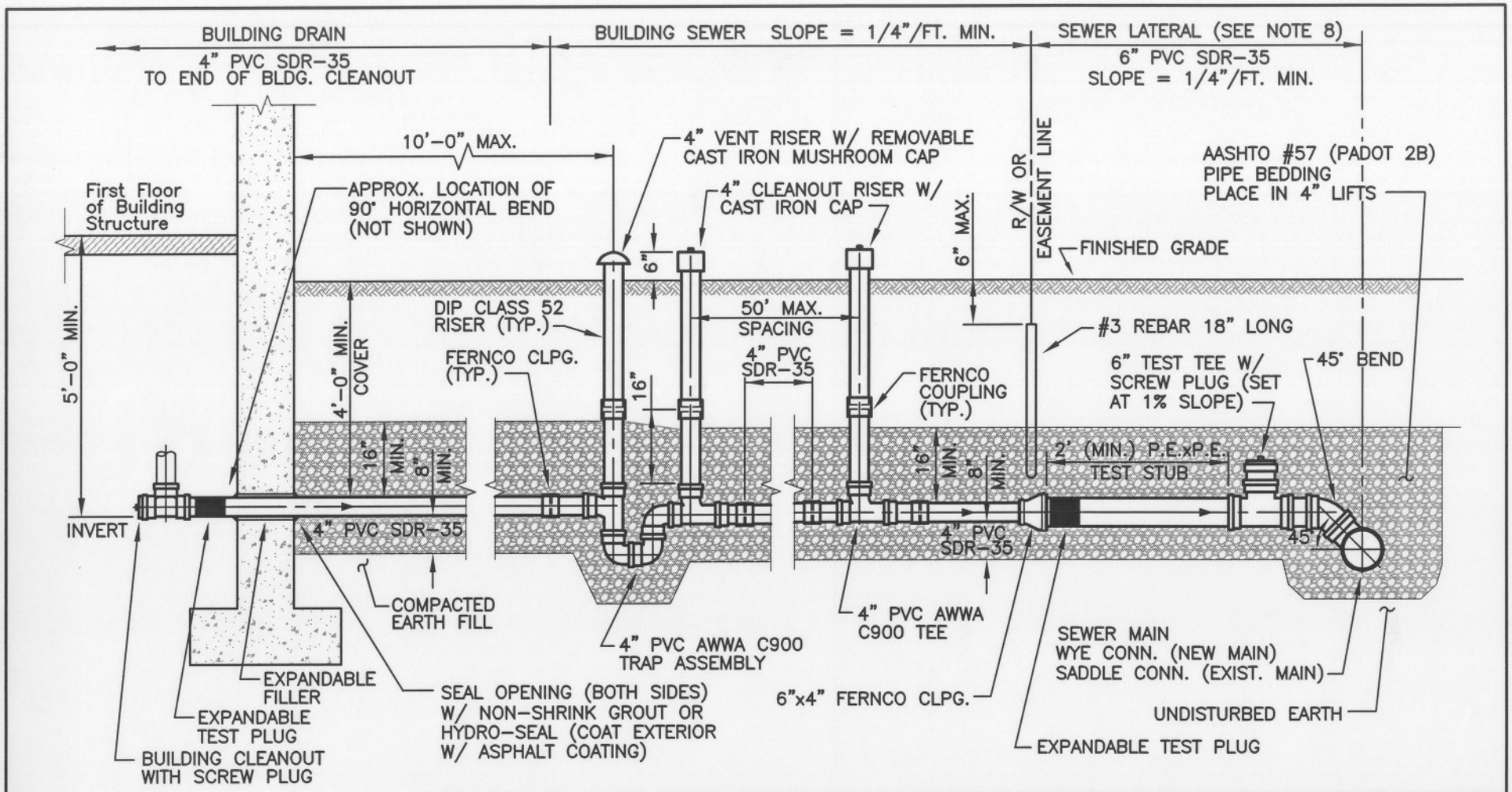

REFER TO DETAIL 17C FOR NOTES.

REVISION	DATE
2	9/21/06
1	2/9/04

EAST COVENTRY TOWNSHIP

STANDARD DETAIL - SEWER SYSTEM

BUILDING SEWER & LATERAL THROUGH FOUNDATION

ARRO Consulting, Inc.
Suite 100, 649 North Lewis Road
Limerick, Pennsylvania 19468
Tel 610.495.0303

DATE: JUNE 2002

DETAIL: 17A

DWG. NAME 522217A

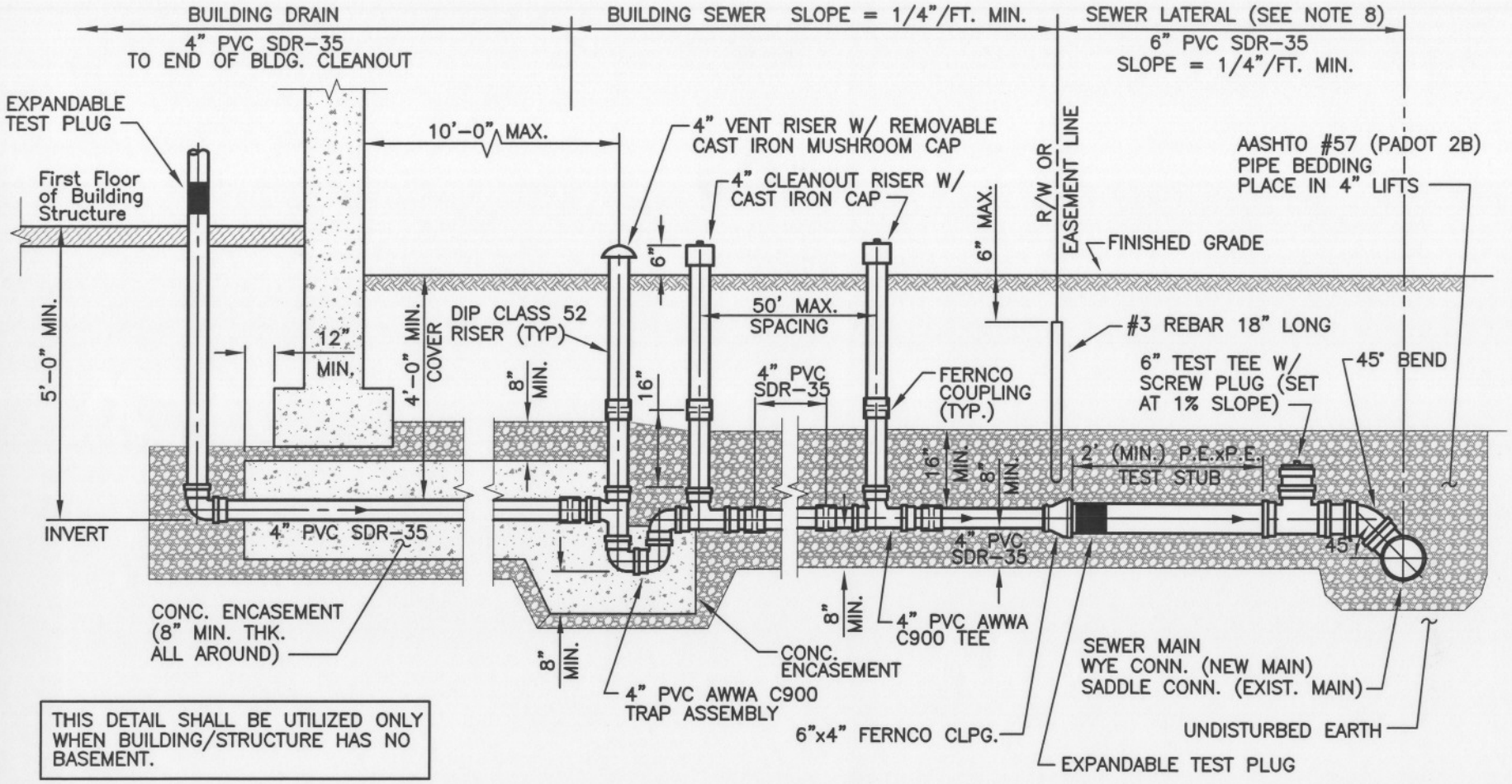

THIS DETAIL SHALL BE UTILIZED ONLY WHEN BUILDING/STRUCTURE HAS NO BASEMENT.

REFER TO DETAIL 17C FOR NOTES.

REVISION	DATE
2	9/21/06
1	2/9/04

EAST COVENTRY TOWNSHIP

STANDARD DETAIL - SEWER SYSTEM

BUILDING SEWER & LATERAL UNDER FOUNDATION

ARRO
ARRO Consulting, Inc.
Suite 100, 649 North Lewis Road
Limerick, Pennsylvania 19468
Tel 610.495.0303

DATE: JUNE 2002

DETAIL: 17B

DWG. NAME 522217B

NOTES:

1. BUILDING SEWER SHALL BE INSTALLED IN ACCORDANCE WITH LOCAL PLUMBING CODE.
2. BUILDING SEWER (4") IS MINIMUM. LARGER PIPE MAY BE USED IF REQUIRED & CONSISTENT WITH LOCAL PLUMBING CODE.
3. ALL LATERALS SHALL BE PLUGGED & MARKED WITH A STAKE AS INDICATED.
4. ACCORDING TO FIELD CONDITIONS, VERTICAL RISER (SEE STANDARD DETAIL) MAY BE UTILIZED WHEN AUTHORIZED BY THE ENGINEER.
5. TO CONDUCT TESTING OF BUILDING SEWER, INSTALL EXPANDABLE PLUGS AT LOCATIONS SHOWN. AT COMPLETION OF TESTING, REMOVE PLUGS.
6. NO BUILDING SEWER VENT CAPS SHALL BE INSTALLED WITHIN A 100-YR FLOOD PLAIN OR WITHIN FLOOD PRONE AREAS.
7. NO VENT CAPS OR CLEANOUTS SHALL BE INSTALLED IN DRIVEWAYS OR OTHER PAVED AREAS, UNLESS SPECIFICALLY APPROVED BY THE TOWNSHIP.
8. THE LATERAL SHALL BE INSTALLED TO THE EDGE OF THE SEWER EASEMENT FOR SEWERS LOCATED IN AN EASEMENT OR TO THE STREET RIGHT-OF-WAY AS A MIN., OR TO SUCH POINT, AS REQUIRED, TO CLEAR STREET SIDEWALKS & UNDERGROUND UTILITIES.
9. FOR NEW SEWER MAINS, INSTALL & TEST LATERAL CONCURRENTLY WITH MAIN. INSTALL 2"x4" ONE-PIECE WOOD MARKER 3' ABOVE GRADE WITH FOOTAGE MARK TO INDICATE DEPTH TO INVERT OVER TEST TEE & END OF LATERAL. AFTER CONNECTION OF BUILDING SEWER, REMOVE MARKERS & INSTALL REBAR OVER TEST TEE AS SHOWN.
10. FOR CONNECTION TO EXISTING SEWER MAINS, CONCURRENTLY TEST BUILDING SEWER & LATERAL UP TO TEST TEE.
11. REFER TO SECTION 6 OF TECHNICAL SPECIFICATIONS FOR COMPLETE MATERIAL, INSTALLATION & TESTING REQUIREMENTS
12. TEST PRESSURE: MINIMUM RESIDUAL PRESSURE OF 5.0 PSI MUST BE MAINTAINED FOR 15 MINUTES WITHOUT INTRODUCTION OF ADDITIONAL AIR OR WATER.

NOTE:
USE THE ABOVE NOTES IN CONJUNCTION WITH DETAILS 17A & 17B.

REVISION	DATE
2	9/21/06
1	2/9/04

EAST COVENTRY TOWNSHIP

STANDARD DETAIL - SEWER SYSTEM

BUILDING SEWER & LATERAL DETAIL NOTES

ARRO Consulting, Inc.
Suite 100, 649 North Lewis Road
Limerick, Pennsylvania 19468
Tel 610.495.0303

DATE: JUNE 2002

DETAIL: 17C

DWG. NAME 522217C

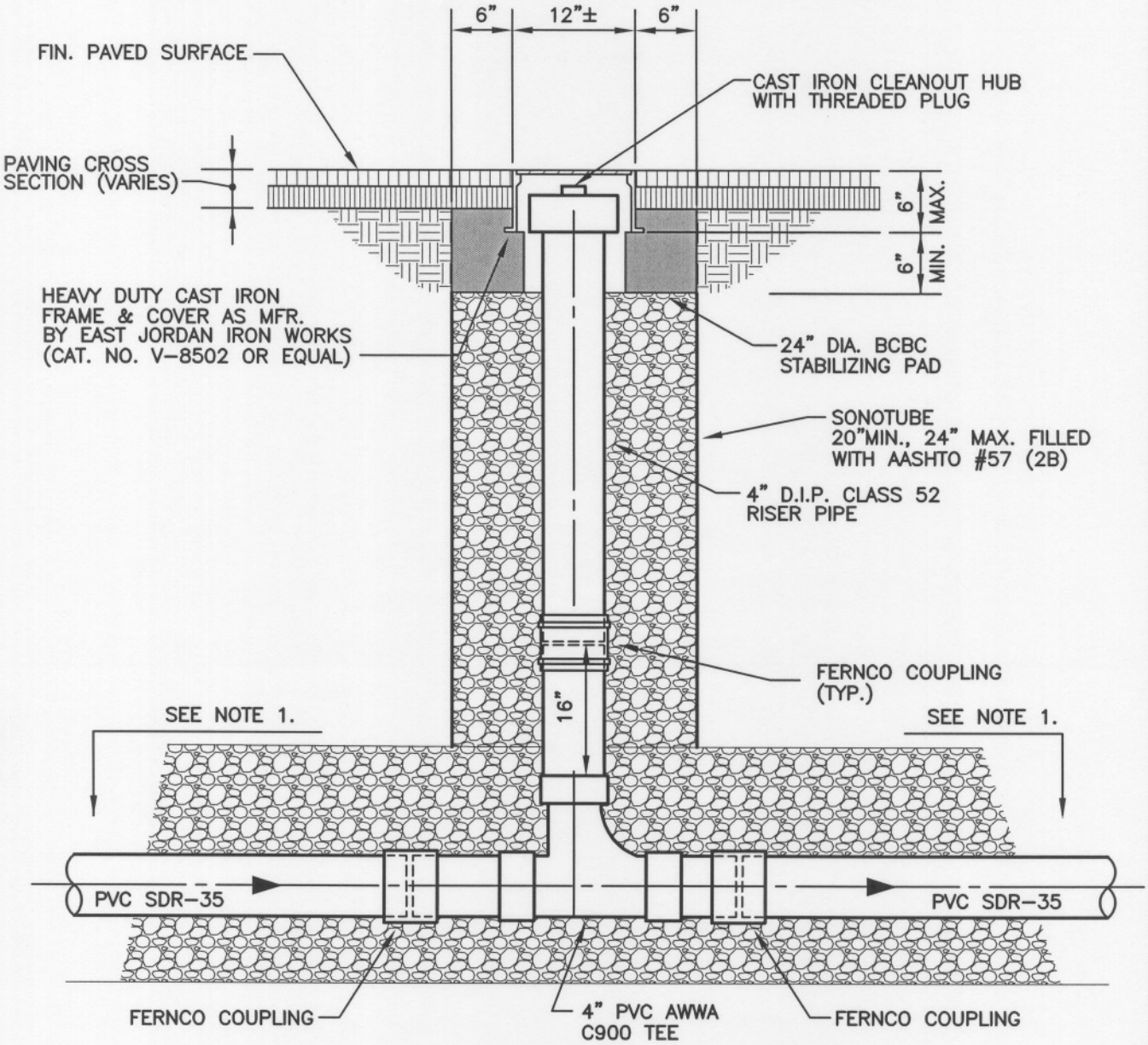

NOTE:

1. SEE BUILDING SEWER & LATERAL DETAILS.
   BUILDING SEWER IS GENERALLY SHOWN ON THIS DETAIL & IS PROVIDED FOR ORIENTATION PURPOSES ONLY.

REVISION	DATE

EAST COVENTRY TOWNSHIP

STANDARD DETAIL - SEWER SYSTEM

NEW CLEANOUT IN PAVED AREA

ARRO
ARRO Consulting, Inc.
Suite 100, 649 North Lewis Road
Limerick, Pennsylvania 19468
Tel 610.495.0303

DATE: SEPTEMBER 2006

DETAIL: 18

DWG. NAME 5222SD18

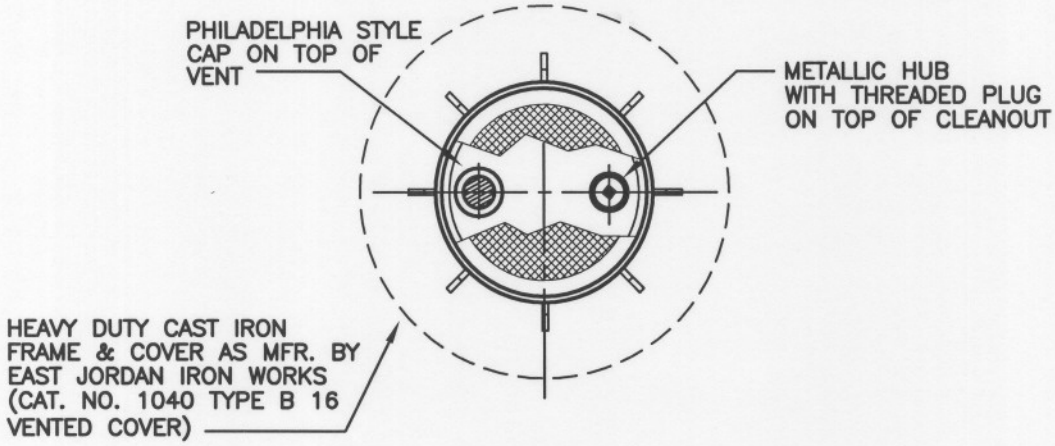

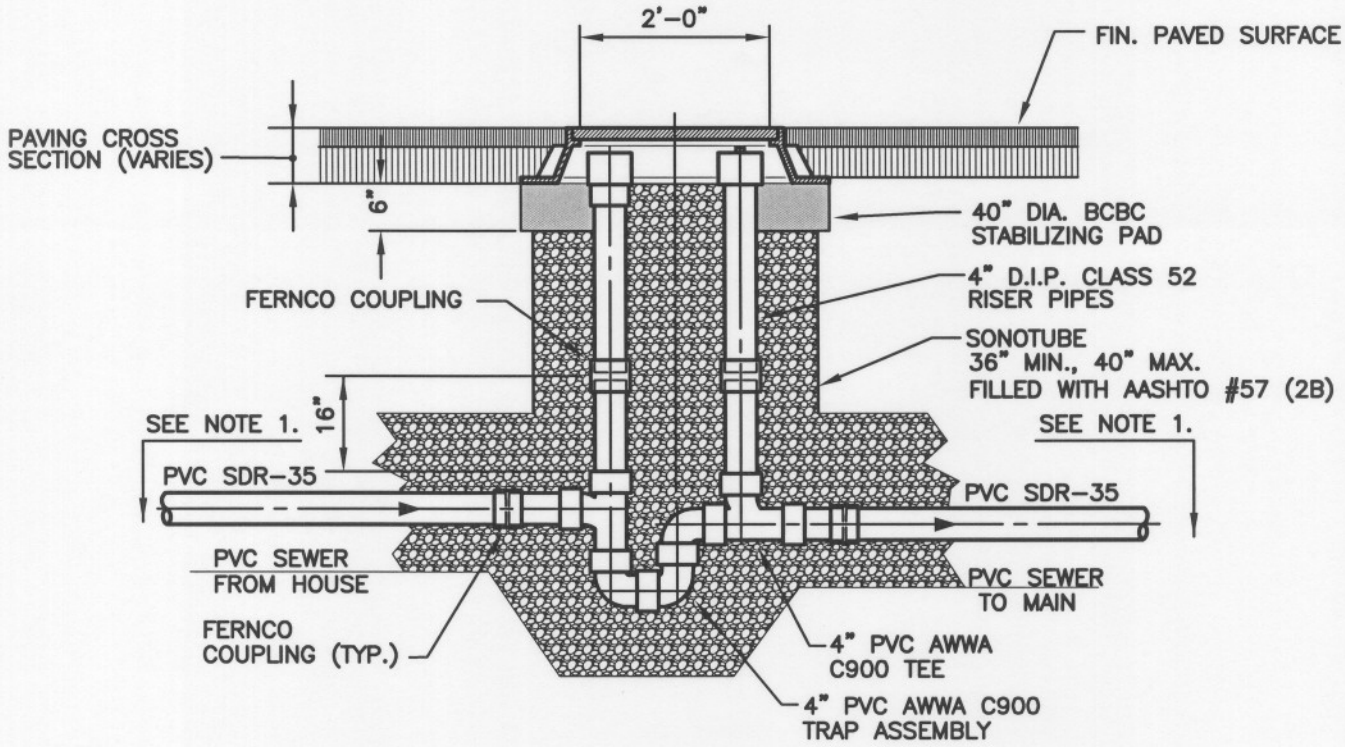

NOTE:

1. SEE SEE BUILDING SEWER & LATERAL DETAILS. BUILDING SEWER IS GENERALLY SHOWN ON THIS DETAIL IS PROVIDED FOR ORIENTATION PURPOSES ONLY.

REVISION	DATE

EAST COVENTRY TOWNSHIP

STANDARD DETAIL - SEWER SYSTEM

ARRO Consulting, Inc.
Suite 100, 649 North Lewis Road
Limerick, Pennsylvania 19468
Tel 610.495.0303

NEW CLEANOUT & VENT IN PAVED AREA

DATE: SEPTEMBER 2006

DETAIL: 19

DWG. NAME 5222SD19

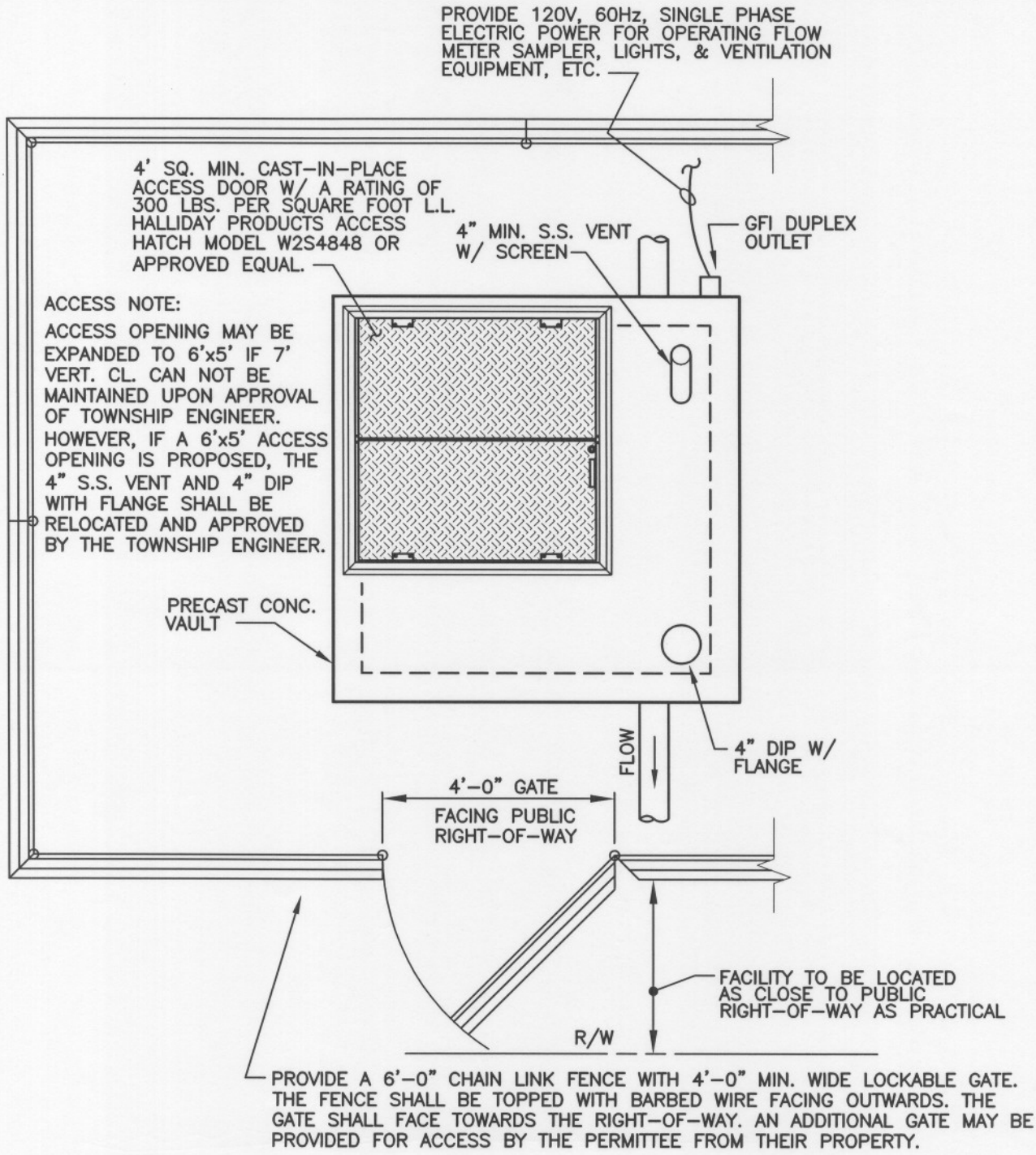

SITE PLAN

REVISION	DATE
2	9/21/06
1	2/9/04

EAST COVENTRY TOWNSHIP

STANDARD DETAIL - SEWER SYSTEM

METERING/SAMPLING FACILITY SITE PLAN

ARRO Consulting, Inc.
Suite 100, 649 North Lewis Road
Limerick, Pennsylvania 19468
Tel 610.495.0303

DATE: JUNE 2002

DETAIL: 20A

DWG. NAME 5222SD20A

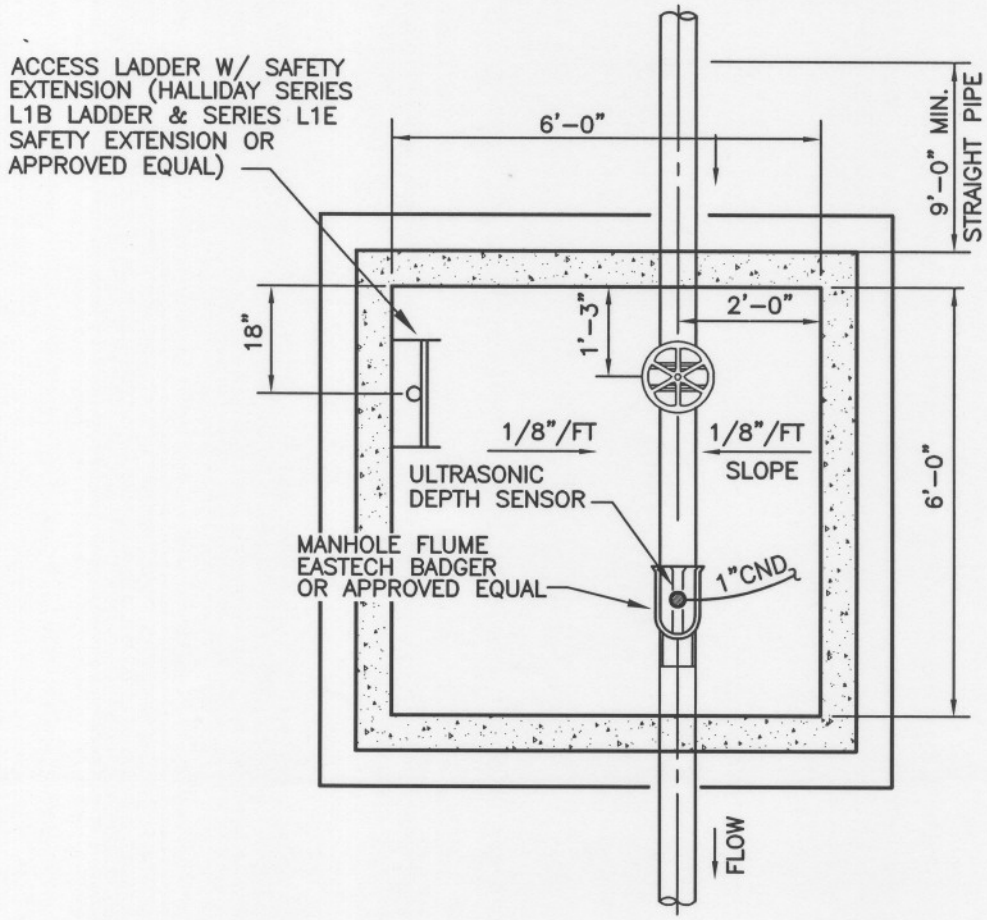

SECTIONAL PLAN

NOTES:

1. THE METERING/SAMPLING FACILITY SHALL BE DESIGNED TO CONFORM TO THE LATEST PA DEP REGULATIONS, GUIDELINES & APPROPRIATE CODES.
2. THE TOWNSHIP ENGINEER SHALL REVIEW & APPROVE THE PROPOSED DESIGN OF THE METERING/SAMPLING FACILITY PRIOR TO CONSTRUCTION.
3. PRECAST CONCRETE VAULT SHALL CONFORM TO SECTION 11.6.A.5 UNLESS OTHERWISE SPECIFIED. THE INTERIOR & EXTERIOR SHALL BE COATED AS PER SECTION 11.6.B.

REVISION	DATE
2	9/21/06
1	2/9/04

EAST COVENTRY TOWNSHIP

STANDARD DETAIL - SEWER SYSTEM

METERING/SAMPLING FACILITY SECTIONAL PLAN

ARRO
ARRO Consulting, Inc.
Suite 100, 649 North Lewis Road
Limerick, Pennsylvania 19468
Tel 610.495.0303

DATE: JUNE 2002

DETAIL: 20B

DWG. NAME 5222SD20B

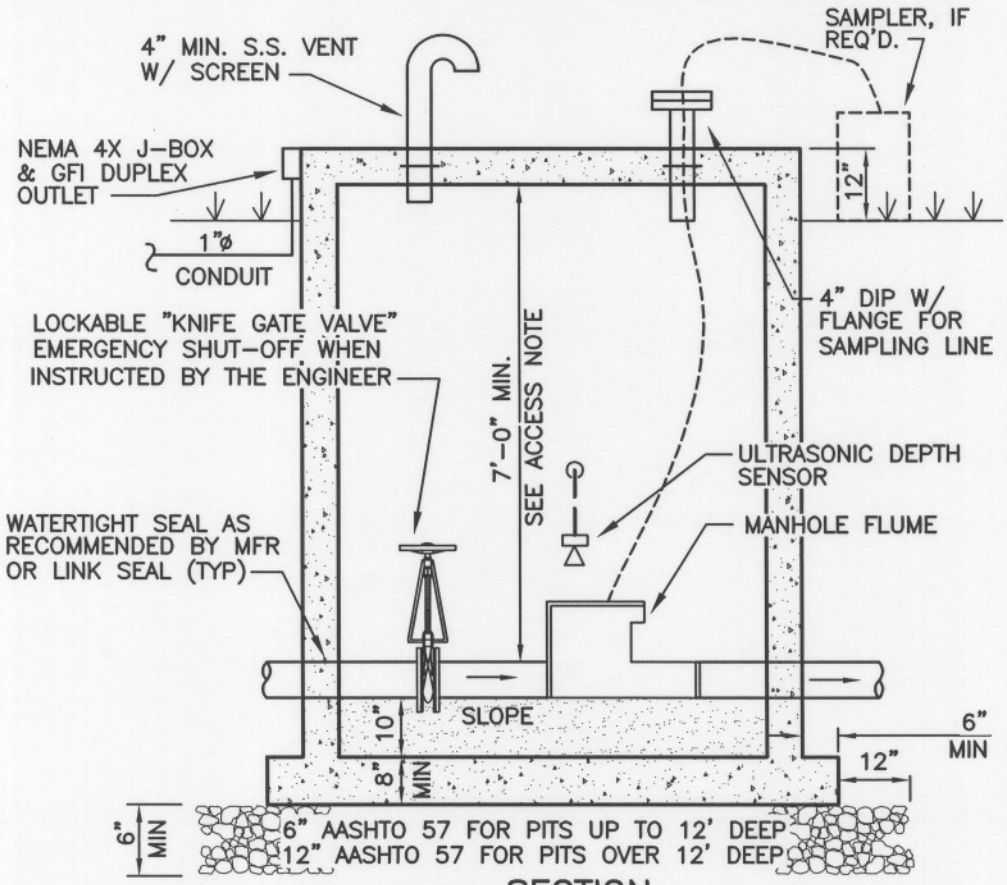

SECTION

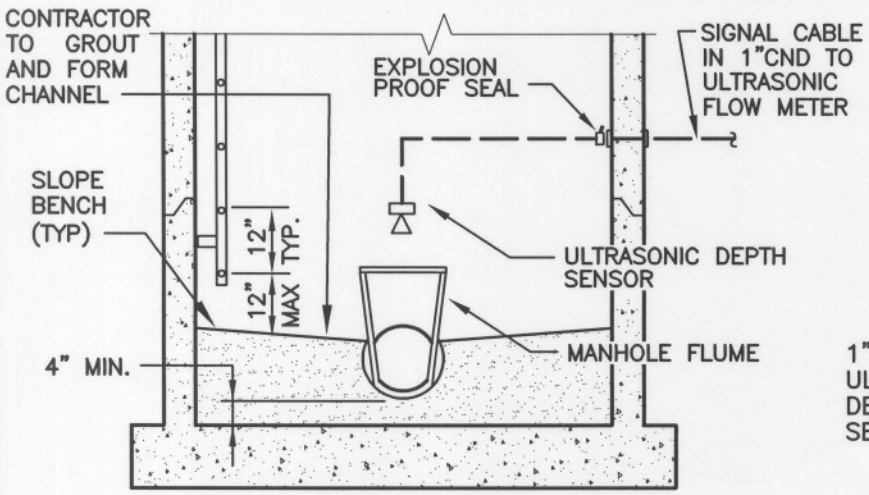

SECTION

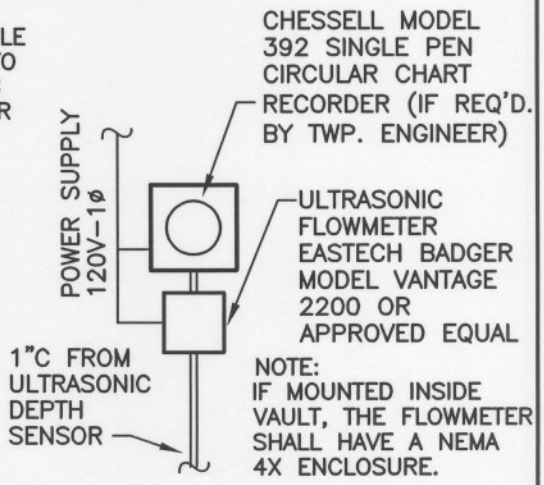

FLOW METER ELEVATION

REVISION	DATE
2	9/21/06
1	2/9/04

EAST COVENTRY TOWNSHIP

STANDARD DETAIL - SEWER SYSTEM

METERING/SAMPLING FACILITY SECTIONS

ARRO
ARRO Consulting, Inc.
Suite 100, 649 North Lewis Road
Limerick, Pennsylvania 19468
Tel 610.495.0303

DATE: JUNE 2002

DETAIL: 20C

DWG. NAME 5222SD20C

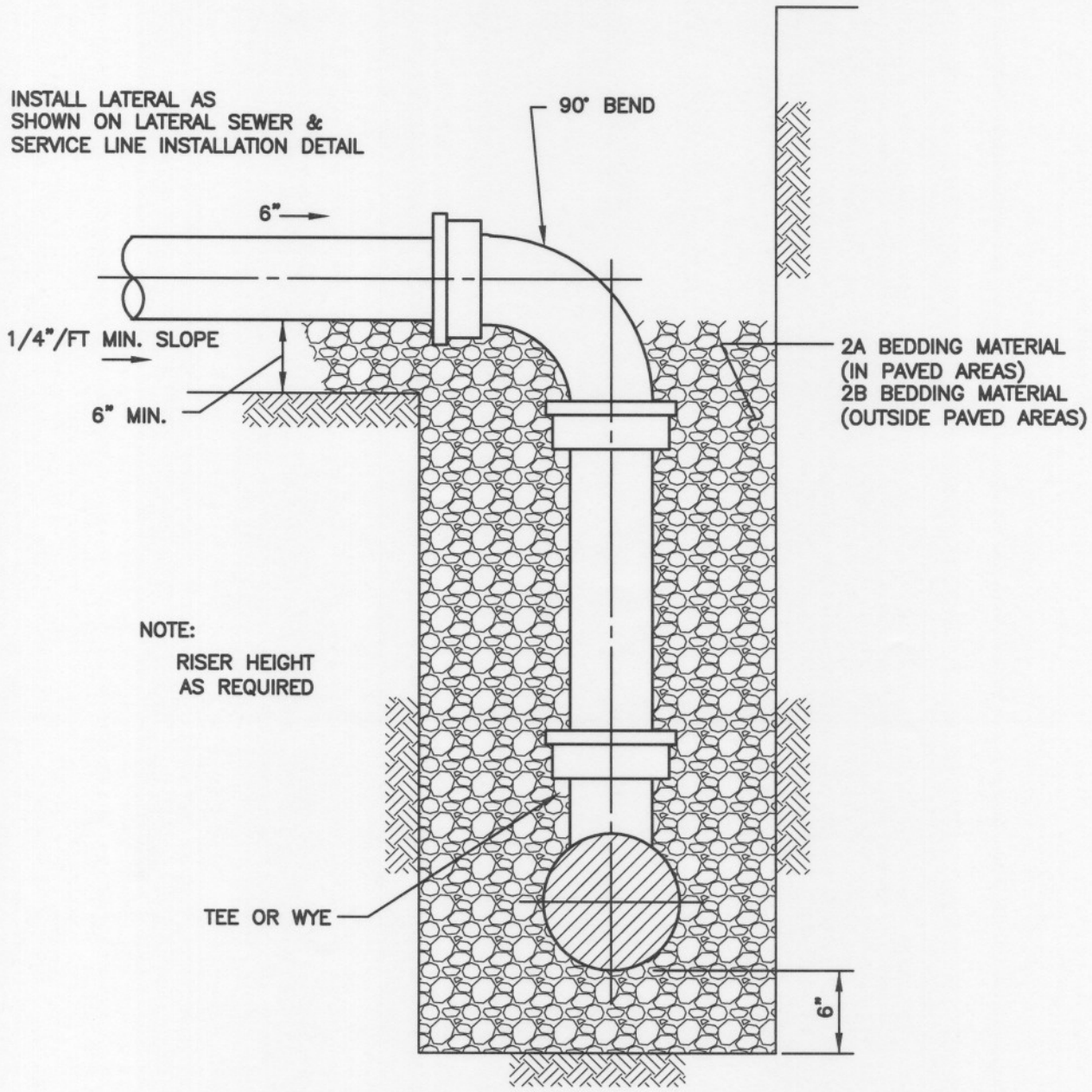

		EAST COVENTRY TOWNSHIP	ARRO Consulting, Inc.
		STANDARD DETAIL - SEWER SYSTEM	Suite 100, 649 North Lewis Road Limerick, Pennsylvania 19468 Tel 610.495.0303
1	2/9/04	**VERTICAL RISER LATERAL CONNECTION**	DATE: FEBRUARY 2004
REVISION	DATE		DETAIL: 21

DWG. NAME 5222SD21

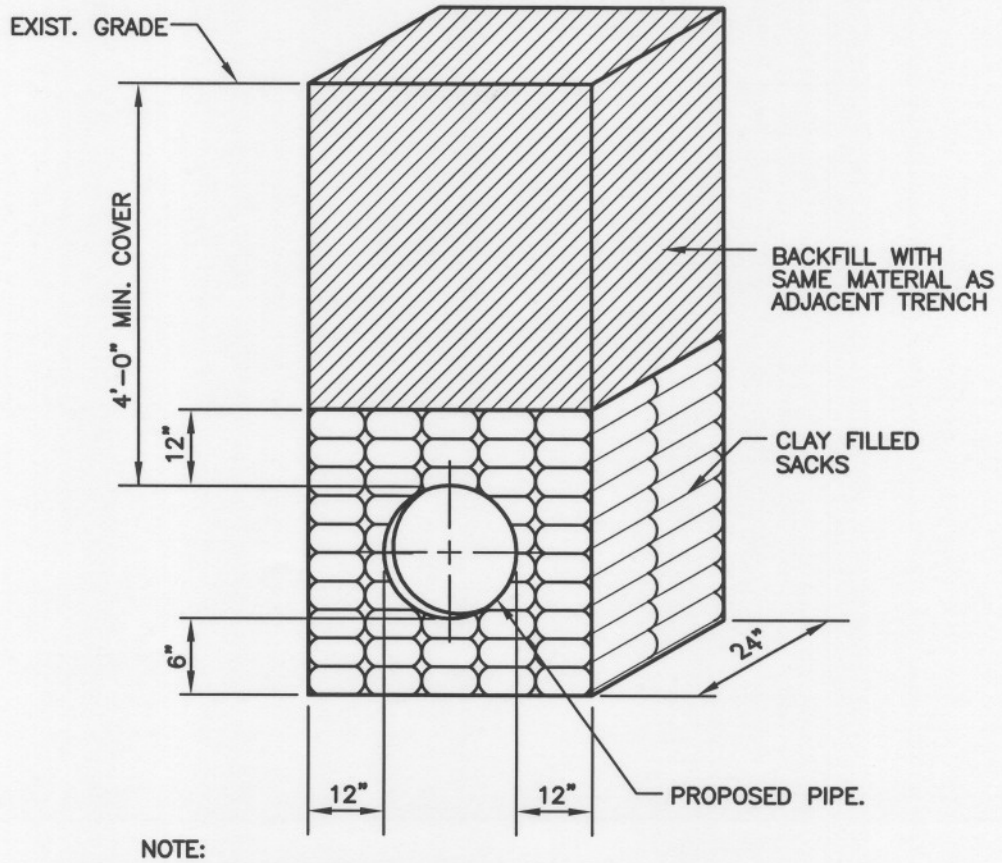

NOTE:
TRENCH PLUG TO BE PLACED AT BOTH SIDES OF ALL STREAM CROSSINGS.

ELEVATION

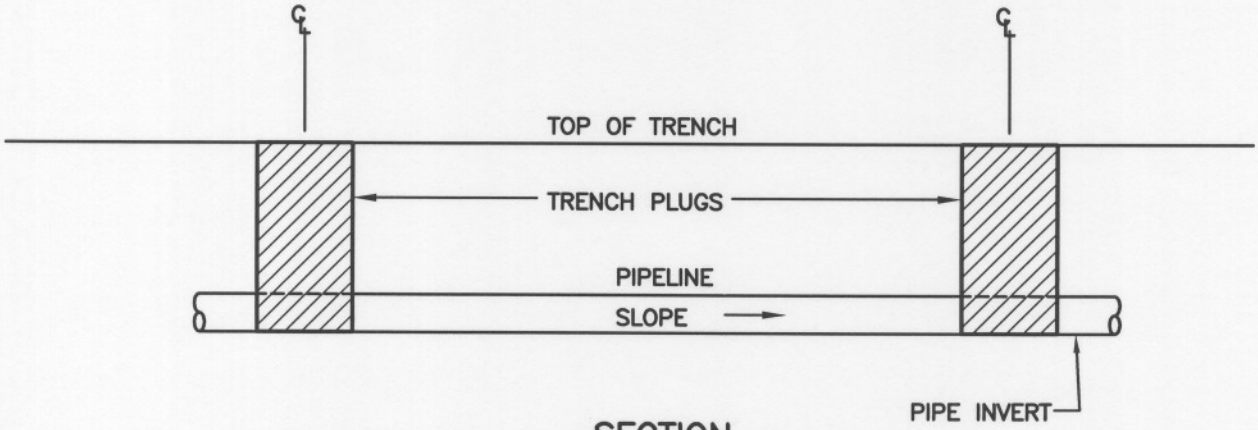

SECTION

1	2/9/04
REVISION	DATE

EAST COVENTRY TOWNSHIP

STANDARD DETAIL - SEWER SYSTEM

TRENCH PLUG DETAIL

ARRO Consulting, Inc.
Suite 100, 649 North Lewis Road
Limerick, Pennsylvania 19468
Tel 610.495.0303

DATE: FEBRUARY 2004

DETAIL: 22

DWG. NAME 5222SD22

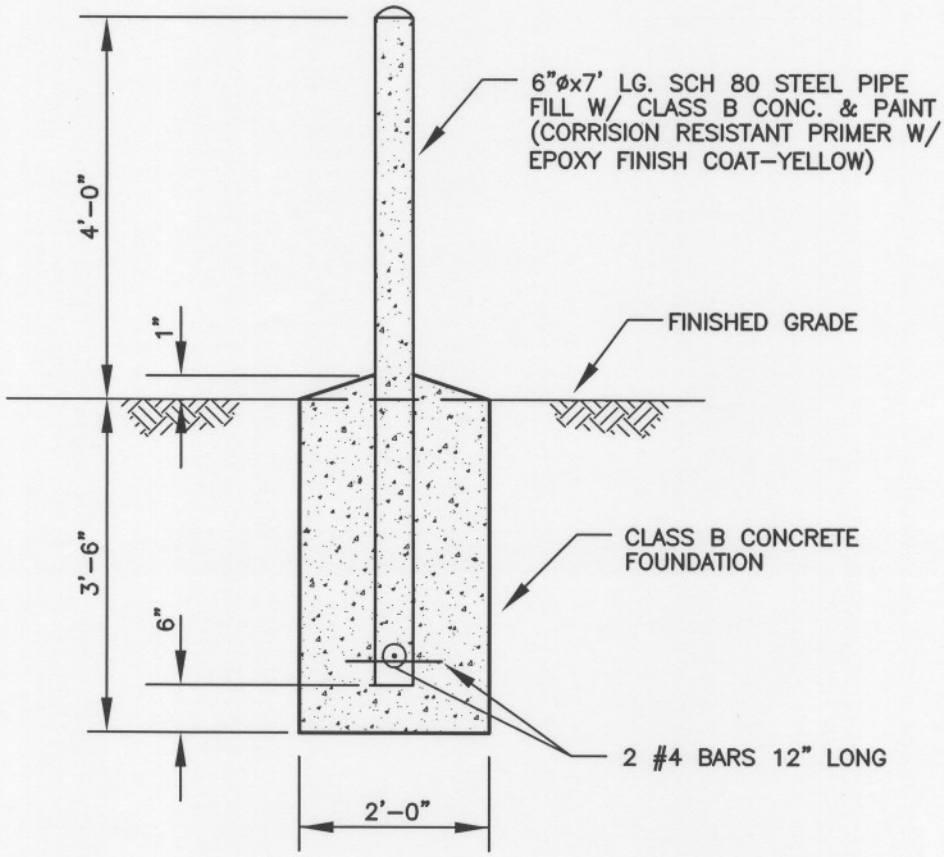

NOTE:
PLACE AS SHOWN ON DWGS.

		EAST COVENTRY TOWNSHIP	ARRO Consulting, Inc.
		STANDARD DETAIL - SEWER SYSTEM	Suite 100, 649 North Lewis Road Limerick, Pennsylvania 19468 Tel 610.495.0303
1	2/9/04	**TYPICAL PROTECTION POST**	DATE: FEBRUARY 2004
REVISION	DATE		DETAIL: 23

DWG. NAME 5222SD23